DT - 5

GENERATOR CHARACTERISTICS AND SPECIFICATIONS

TR216-12

TABLE OF CONTENTS

1. INTRODUCTION 4

1.1. HISTORY 4
1.2. APPLICATIONS 4
1.2.1. Driving Types 4

2. BASIC CONCEPTS 5

2.1. OPERATION PRINCIPLE 5
2.2. THREE PHASE CURRENT GENERATION 6
2.2.1. Three phase system connections 6
2.2.2. Multiple rated voltage 8
2.3. GENERATOR PERFORMANCE AT NO LOAD AND UNDER LOAD 9
2.4. CYLINDRICAL AND SALIENT POLE MACHINES 11
2.5. REACTANCES 12
2.6. SALIENT POLE MACHINE POWER 13
2.7. DEFINITIONS 14
2.7.1. Harmonic Distortion 14
2.7.2. Desplacement factor 14
2.7.3. Voltage Modulation 15
2.7.4. Angular Displacement 15
2.7.5. Voltage Unbalance 15
2.7.6. Voltage Transient 15
2.7.7. Voltage Tolerance 15

3. WEG GENERATORS 16

3.1. NORMAS APLICÁVEIS 16
3.2. BRUSH EXCITATION GENERATORS 16
3.2.1. SL Type (old DL) 16
3.3. BRUSHLESS GENERATORS 16
3.4. SPECIAL APPLICATION BRUSHLESS GENERATORS 18
3.5. SYNCHRONOUS MOTORS 19
3.6. VOLTAGE REGULATOR 21
3.7. VOLTAGE REGULATION TIME (REPONSE TIME) 21

4. AMBIENT CHARACTERISTICS 23

4.1. ALTITUDE 23
4.2. AMBIENT TEMPERATURE 23
4.3. DETERMINATION OF GENERATOR USEFUL POWER ON DIFFERENT TEMPERATURE AND ALTITUDE CONDITIONS 23
4.4. AMBIENT ATMOSPHERE 23
4.4.1. Aggressive Environments 23
4.5. DEGREE OF PROTECTION 24
4.5.1. Identification Code 24
4.5.2. Usual Types 25
4.6. NOISE LEVEL LIMITS 25
4.7. VIBRATION 26
4.8. COOLING 27
4.8.1. Open generator 27
4.8.2. Totally Enclosed Generator 28
4.9. WEATHERING PROOF GENERATORS 29
4.10. ACCESSORIES/SPECIAL FEATURES 29
4.10.1. Space Heater 29
4.10.2. Electric generator thermal protection 29
4.10.2.1. Thermoresistances (Pt-100) 29

4.10.2.2. Thermistors (PTC and NTC) 30
4.10.2.3. Thermostats 30

5. PERFORMANCE CHARACTERISTICS 32
5.1. RATED POWER 32
5.2. TEMPERATURE RISE – INSULATION CLASS 33
5.2.1. Winding heating up 33
5.2.2. Electric rotating machine life time 34
5.2.3. Insulation class 34
5.2.4. Winding temperature measurement 34
5.2.5. Aplication to electric machines 34
5.3. VOLTAGE DROP 35
5.3.1. Voltage drop calculation 35
5.3.2. Power factor influence 36
5.3.3. Initial load influence 36
5.3.4. Motor Starting Limitation 38
5.4. OVERLOAD 42
5.5. OVERSPEED 42
5.6. SHORT-CIRCUIT CURRENT 42
5.7. REACTANCE CONVERSION 42
5.8. GENERATOR PROTECTION 43
5.9. SERVICE DUTY 43
5.9.1. Standisdized Service Duties 43
5.10. LOAD DIAGRAM 44
5.11. GENERATOR PARALLEL OPERATION 46
5.12. GROUND COIL CALCULATION OF THE GENERATOR STAR POINT 47

6 . CONSTRUCTIVE CHARACTERISTICS 48
6.1. MAIN COMPONENTS 48
6.1.1. Main machine stator 48
6.1.2. Main machine rotor 48
6.1.3. Main exciter stator 48
6.1.4. Main exciter rotor and rotating rectifiers 48
6.1.5. Auxiliary exciter 48
6.1.6. Auxiliary winding (auxiliary coil) 48
6.2. IDENTIFICATION NAMEPLATE 48
6.3. STANDARDS 48
6.4. PAINTING – GENERAL PURPOSE GENERATORS 48
6.5. GROUNDING LUG 49
6.6. MOUNTING 49
6.7. USUAL OPERATING CONDITIONS 53

7 . GENERATOR SELECTION 54
7.1. REQUIRED CHARACTERISTICS FOR CORRECT SELECTION 54
7.2. MAIN GENERATOR APPLICATIONS 54
7.2.1. Frequency conversion 54
7.2.2. Current Conversion 55
7.2.3. NO-BREAK 55
7.2.4. Short-Break Diesel 55
7.2.5. DPC Generators 56
7.2.6. Industrial line generators 56
7.2.7. Telecommunication generators (TELEBRÁS Standard) 57
7.2.8. Deforming power supplied generators 57

8. TESTS 58

9. LIST OF FORMULAS 59

SYNCHRONOUS MACHINE MANUAL EVALUATION 61

1. INTRODUCTION

1.1. HISTORY

The elementary generator was invented in England in 1831 by MICHAEL FARADAY, and in the United States, at the same period, by JOSEPH HENRY.
This generator consisted basically of a magnet moving inside a turn, or vice-verse, originating a electro-magnetic force which is recorded in a galvanometer.

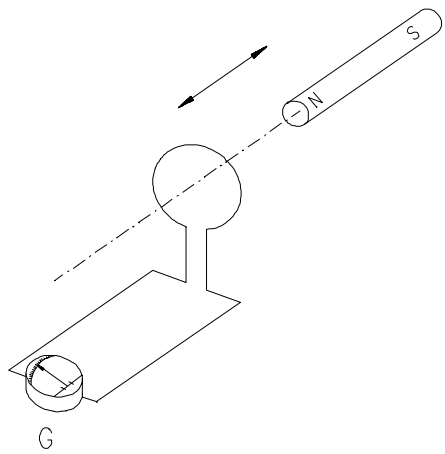

Fig. 1.1.1 – The "G" galvanometer indicates current going through when the magnet moves in reference to the coil.

WEG MÁQUINAS started producing generators in 1980, and a lot of experience was obtained along the years in addition to improved technology in the manufacturing of these small and large size machines.

1.2. APPLICATIONS

Synchronous generators are machines intended to convert mechanical power into electrical energy.
In practical terms, the energy required consumed in the industries, houses, cities, etc come from these generators.

WEG MÁQUINAS manufacturer generators for the following applications:

- Aeolic generation;
- Farms, Sítios, Garimpos, Carros de Som;
- Small Energy Generation Centers for General Purposes;
- Emergency Diesel Gen-Sets;
- Data Processing Centers;
- Telecommunications;
- Power Generation Plants - PCH's;
- Co-generation / Turbo Generators;
- Specific Applications for Marine Purposes, Sugar and Alcohol Plants, Lumber Mills, Rice Plantations, Petrochemical Industries, etc.

1.2.1. Driving Types

A – Diesel Gen-Sets

These are generators driven by Diesel engines;
Output ratings: 21 to 3500 kVA (Service Duty S1).
Speed: 1800 rpm (IV poles) / 1200 rpm (VI poles) / 900 rpm (VIII poles).
Voltage: 220, 380 or 440 V – 4160 – 6600 V.
Frequency: 50 or 60 Hz.

B - Hydrogenerators

These are generators driven by Hydraulic Turbines.
Output ratings: up to 50.000 kVA.
Speed: 360 to 1800 rpm (XX to IV poles).
Voltage: 220 to 13800 V.

C - Turbogenerators

These are generators driven by Steam Turbines.
Output ratings: up to 20.000 kVA.
Speed: 1800 rpm (IV poles).
Voltage: 220 to 13800 V.

2. BASIC CONCEPTS

2.1. OPERATION PRINCIPLE

The main characteristic of a generator is to convert mechanical power intro electrical energy. To understand better the generator operation principle, let's consider first a turn immersed into a magnet field produced by a permanent magnet (Fig.2.1.1). The fundamental operation is based on the relative movement between a turn and a magnetic field. The turn terminals are connected to two rings which are connected to an external circuits through the brushes. This type of generator is called rotating armature.

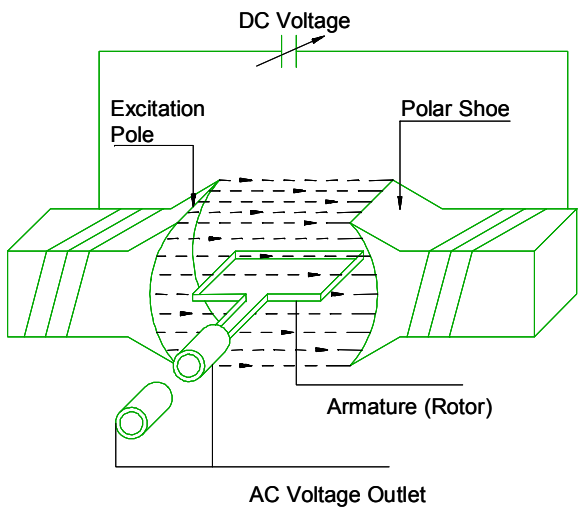

Fig. 2.1.1 – Operation diagram of an elementary generator (rotating armature).

Let's suppose that the coil turn at uniform speed to the arow rotation direction at the magnetic field "B" also uniform (Fig.2.1.1).
If "v" is the cable linear speed in relation to the magnetic field, according to the induction law (FARADAY), the instantaneous value of the electro-magnetic force induced in the cable when moving is determined by:

e = electro-moving force
e = B.l.v.sen(B^v)
B = magnetic field induction
l = length of each cable
v = linear speed

For N number of turn, we will have:

$$e = B.l.v.sen(B^v).N$$

The electro-magnetic force variation in the conductor in relation to time is determined by the magnetic induction distribution law under a pole. This distribution is complex and depends on the polar shoe shape. With a convenient shoe design, we can obtain induction senoid distribution. On this case, the electro-magnetic force induced in the conductor also varies with the time under a senoid law.
Fig. 2.1.3.a. shows only one side of the coil in the magnetic field, at 12 different positions, where each position is separated from the other at 30º.
Fig. 2.1.3.b. shows the corresponding voltages to each of the positions.
However, on rotating field generators (Fig. 2.1.2) the armature voltage is taken directly from the armature winding (we refer to the stator) without going through the brushes. The excitation power of these generators is usually lower than 5% of the rated power. For this reason, the fixed armature type (or rotating field) is the most commonly used.

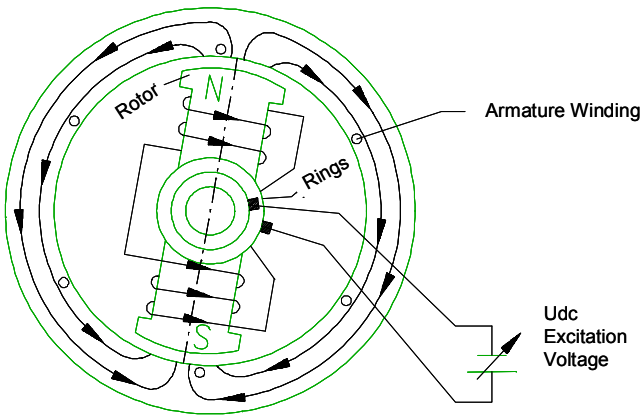

Fig. 2.1.2 – Operation diagram of an elementary generator (fixed armature).

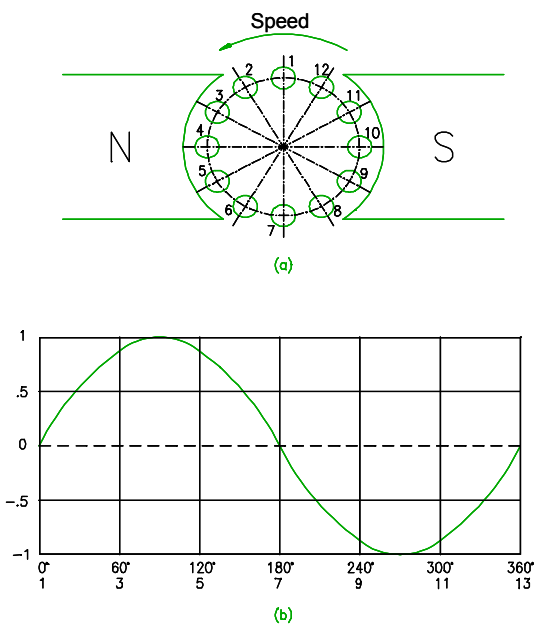

Fig. 2.1.3 – Magnetic Induction Distribution under one Pole.

At each turn we will have a complete cycle of the generated voltage for a machine fitted with a pair of poles. The windings may be built with a higher number of pairs of poles which will be distributed alternatively (one north and one south).
In this case, we will one cycle at each pair of poles. Considering that "n" is the machine speed in "rpm" and "f" is the frequency in cycles per second (Hertz), we will have:

$$f = \frac{p \cdot n}{120} \text{ (Hz)}$$

f = frequency (Hz)

p = number of poles

n = synchronous speed (rpm)

Note that the machine number of poles must always be pair so as to form pairs of poles. Table 2.1.1 shows the corresponding synchronous speeds for frequency and usual polarities.

Number of poles	60 Hz	50 Hz
2	3600	3000
4	1800	1500
6	1200	1000
8	900	750
10	720	600

Table 2.1.1 – Synchronous Speeds

2.2. THREE PHASE CURRENT GENERATION

The three phase system consists of three single phase voltage systems U1 , U2 and U3 in such a way that the displacement among them is 120º (Fig.2.2.1.).
The winding on this type of generator consists of a three sets symmetrically placed coils in the space, forming among them also an angle of 120º.
To allow a balance to the system, that is U1 = U2 = U3, the number of turns in each coil must also be the same.

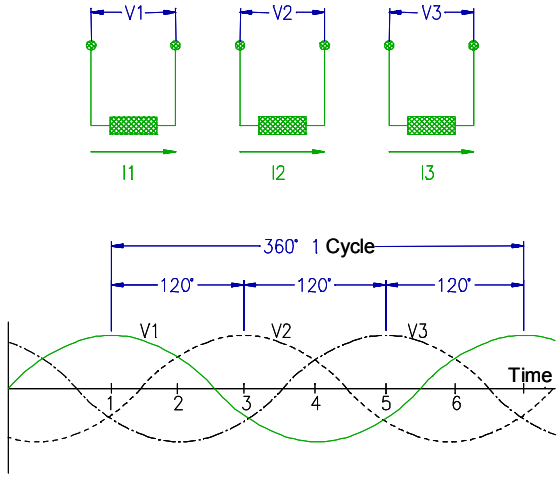

Fig. 2.2.1 – Three phase system.

The connection of the three single phase systems to get the three phase system is usually made of two different ways as follows. On these systems (Fig 2.2.2 and 2.2.3), voltages are shown with inclinadas arrows, or rotating vetors, keeping among them the corresponding displacement angle (120º).

2.2.1. Three phase system connections

a) Delta connection:

We call "phase voltages/currents" the voltages and currents of each of the three single phase systems indicated by Vf and If. If we connect the three single phase systems among them, as described in figure 2.2.2.a, we can eliminate three wires, leaving only one on each connection point, and the three phase system will only require three wires U, V and W.
The voltage between any of these three leads is called "power suppply voltage" (Vl), which is the rated voltage of the three phase system. The current on any of these leads is called "power supply current" (Il).

Checking the diagram of figure 2.2.2.b, we have:

1) On each load is applied a power supply voltage "Vl", which is the corresponding single phase system voltage, that is,
$$Vl = Vf.$$
2) The current on each power supply lead, or power supply current "Il", is the sum of currents of of the two phases conected to this lead, that is, Il = If1 + If3.
As there is a default between these currents, the sum must be made graphically, as shown in figure 2.2.2.c. It is concluded that
$$Il = If \times \sqrt{3} = 1.732 \times If.$$

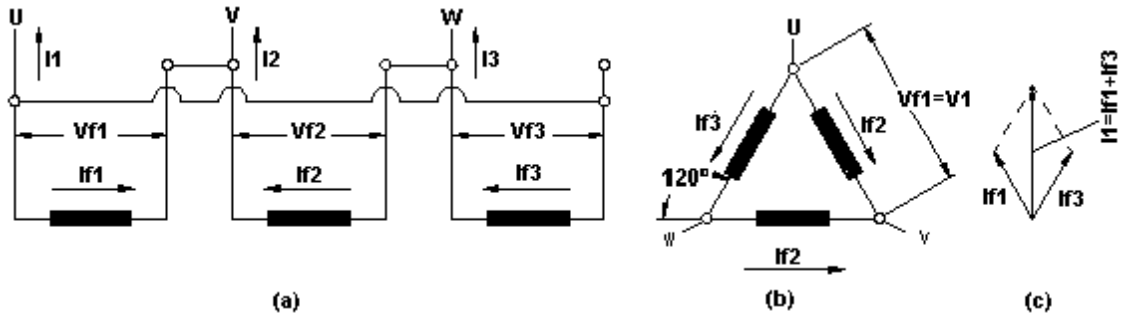

Fig. 2.2.2 – Delta Connnection.

Example: We have a 220V rated voltage balanced three phase system.
The power supply current (Il) measured is 10 A. If a three phase load consisting of three identical delta connected loads is connected to this system, what is the voltage and current on each of these loads?

We have Vf = V1 = 220V on each of the loads.

If Il = 1.732 x If, If = 0.577 x Il = 0.577 x 10 = 5.77 A on each of the loads.

a) Star connection:
Connecting one of the leads from each single phase system to a common point, the 3 remaining leads form a star three phase system as per fig. 2.2.3.a.
Some times the star three phase system is made with "four leads" or "with neutral".
The fourth leads is connected to the 3 phases common point. The power supply voltage, or three phase rated voltage, and the power supply current are defined identically to delta connection system.

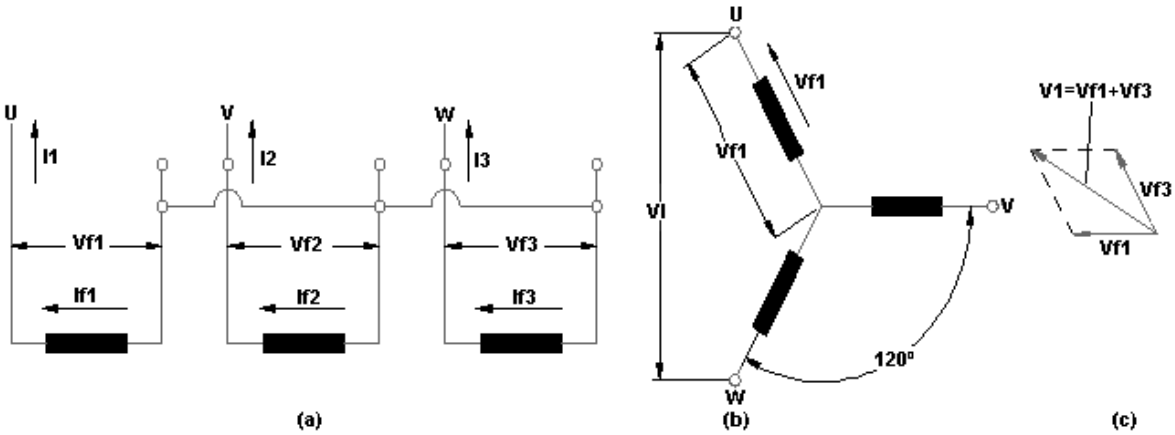

Fig. 2.2.3 – Star Connection.

Checking the diagram of fig. 2.2.3.b, we have:

1) The current on each of the power supply leads, or power supply (Il), is the same current of the phase to which the leads is connected, that is, Il = If.

2) The voltage between any two leads of the three phase system is the voltage graphic sum fig. 2.2.3.c of the two phase to each the considered leads are connected, that is, Vl = Vf x √ 3 = 1.732 x Vf.

Example: We have a three phase load consisting of 3 identical loads, and each load is formes to be connected to a 220V voltage, absorbing 5.77A.
What is the three phase rated voltage that powers this load at its normal conditions (220V and 5.77A)
What is the power supply current (Il)?

We have:
Vf = 220V (rated voltage of each load)
Vl = 1.732 x 220V = 380V
Il = If = 5.77 A.

2.2.2. Multiple rated voltage

The majority of the generators are factory-supplied with reconnectable winding terminals so as to allow at least two different voltages. The most usual terminal reconnection types for generators or asynchronous motors for operation at more than one voltage are:

a) Series-parallel connection:
The winding of each phase is divided in two parts (remember that the number of poles is always pair, meaning that this connection type is always feasible).
Connecting the two halves in series, each half will take half of the machine rated phase voltage. Connecting the two halves in parallel, the machine can be power supplied with a voltage equal to half of the previous voltage, without changing the voltage applied to each coil. See numerical examples of fig. 2.2.4.

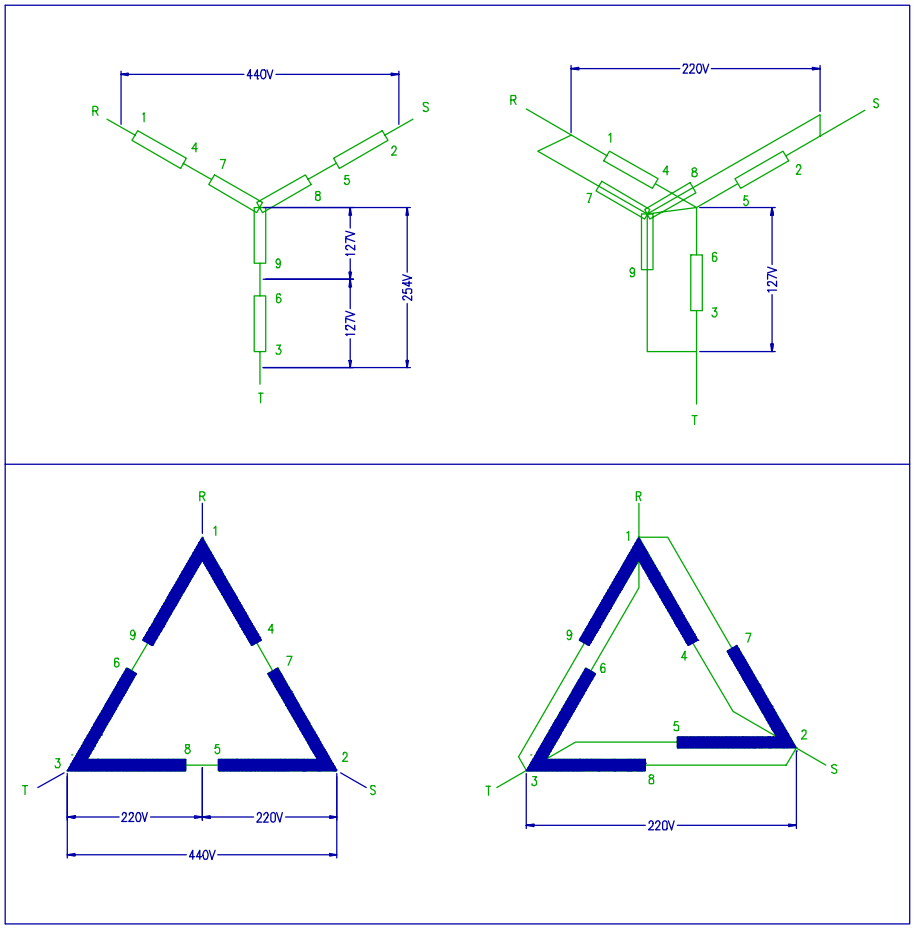

Fig. 2.2.4 – Multiple Rated Voltage.

It is usual to supply generators connected at three voltages: 220/380/440.
The procedure on this case to connect it at 380 V is to connect the generator at 440 V, and change the reference on the voltage regulator so as to get reduced voltage
(magnetic reduction voltage). This way, we can get three voltages on the Y connection, which is the most commonly applied to generators.

CONNECTION	POWER SUPPLY VOLTAGE	POWER SUPPLY CURRENT	OUTPUT POWER (VA)
Y	Vl = √ 3 x Vf	Il = IF	P = 3 x Vf x If
Δ	Vl = Vf	Il = If x √ 3	P = √ 3 x Vl x Il

Table 2.2.1 – Ratio between voltages (power supply/phase), currents (power supply /phase) and output power on a three phase system.

b) Star-delta connection:
It is usual to start asynchronous motors on star-delta connnection.
On this connection, each phase winding will have two terminals coming out from the motor. If we connect the 3 phases, at delta, each phase will be powered with the power supply voltage, for example (fig.2.2.5.b) 220 Volts. If we connect the 3 phases at star (Fig.2.2.5.a), the motor can be connected to one of the power supply cables with voltage equal to 220 x ˜3 = 380 V without modifying the winding voltage which remains equal to 220 Volts per phase.

This connnection requires 6 terminals accessible to the motor and will serve for any dual rated voltages as long as the second is equal to the first multiplied by ˜3. Examples: 220/380V - 380/660V - 440/760V. Please note that a voltage above 600 Volts is not considered a low voltage. Applicable Standards classify such voltage as medium.
For example, on the 380/660 and 440/760V, the higher voltage serves only to indicate that the motor can be reconnected to star-delta, as there are no power supplies at the voltage level.

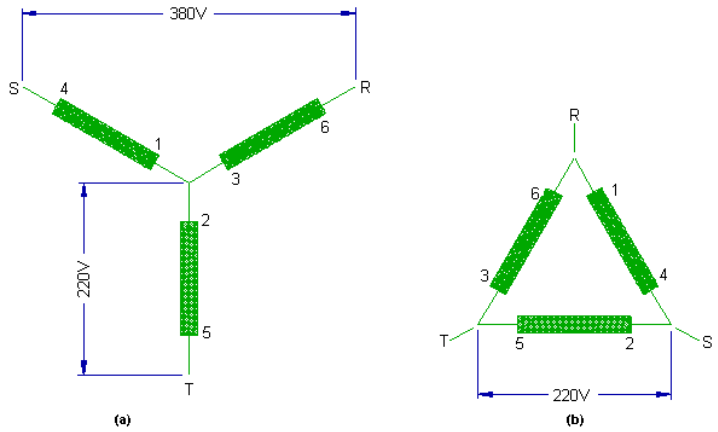

Fig. 2.2.5 – Star-Delta Connection.

2.3. GENERATOR PERFORMANCE AT NO LOAD AND UNDER LOAD

At no load (at constant speed), the armature voltage depends on the magnetic flow generated by excitation poles, or on the current that goes through the field winding. This occurs because no current goes through the stator. So the armature reaction is void whose effect is to change the overall flow.
The ratio between voltage generated and excitation current is called no load characteristic (fig. 2.3.1) where we can notice the machine saturation status.

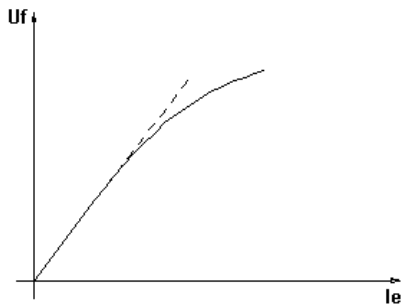

Fig. 2.3.1.- No Load Characteristics.

At load, the current that goes through the armature conductors creates a magnetic field, resulting in modifications on the main magnetic field distribution and intensity. This modification depends on the current, on the cosφ and on the load, as described ahead:

a) Purely Resistive Load:
If the generator power supplies a purely resistive circuit, a magnetic field is generated by the load current.
The indiced magnetic field generates 2 dephased poles (bipolar generator - fig. 2.3.2.a) at 90º in delay referred to main poles. These poles influence an adverse force to the movement over the induced poles, where power is required to keep the rotor turning.
The diagram of fig. 2.3.2.b shows the no load main flow change at Φo referred flow to the ΦR armature reaction flow. The change of Φo is quite little, not producing a significant big change in relation to the resulting flow. Due to voltage loss on armature winding, excitation current needs to be increased so as to keep the rated voltage (fig. 2.3.5).

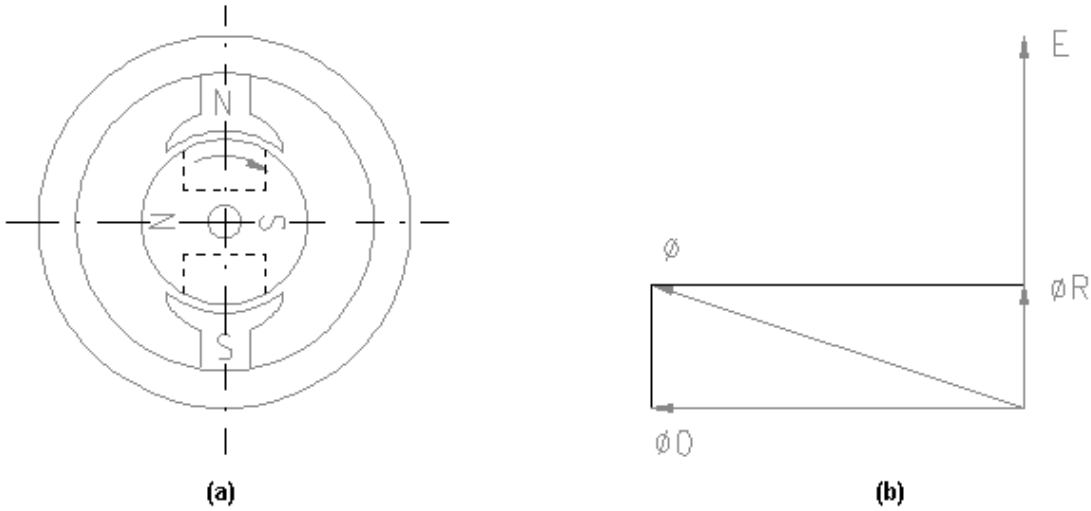

Fig. 2.3.2 – Purely Resistive Load.

b) Purely Inductive Load:
On this case, the current phase is dephased at 90º in delay referred to voltage, and the armature reaction field is, as a consequence on the same direction of the main field. However, at opposite polarity. The inductive load effect is de-magnetizing (fig. 2.3.3.a and 2.3.3.b). The inductive loads store energy in their inductive field and send it all back to the generator.
Without causing any braking torque to the induced. On this case, only mechanical power is required to compensate losses.
Due to the de-magnetizing effect, a high excitation current is required so as to keep the rated voltage (fig. 2.3.5).

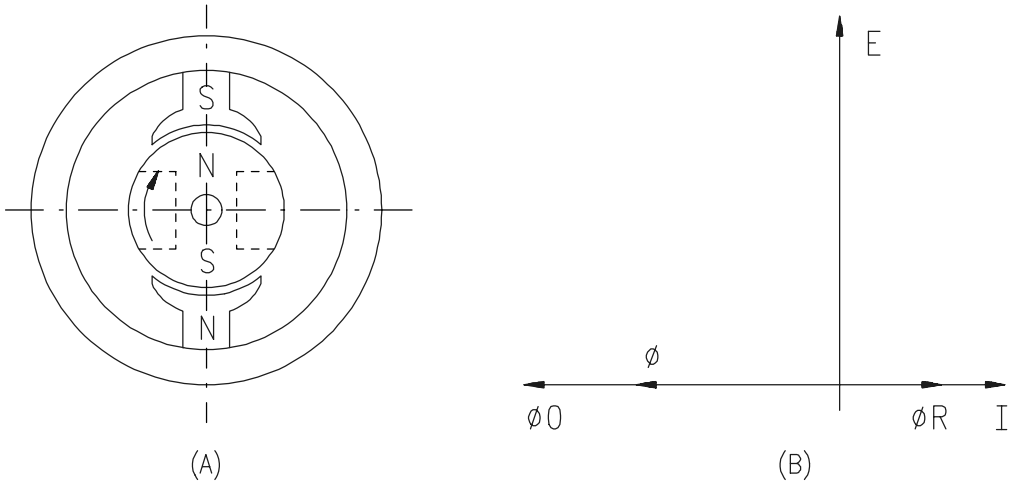

Fig. 2.3.3 - Purely Inductive Load.

c) Purely Capacitive Loads:
The current armature for a capacitive load is dephased at 90º in advance referred to the voltage. As a cosequence, the armature reaction field will be placed on the same direction of the main field and at the same polarity.
The induced field, on this case, has a magnetizing effect (fig. 2.3.4a and 2.3.4b).
Capacitive loads store energy on their electric a field and send it all back to the generator, not producing, same as on the previous case, no braking torque over the induced. Due to the magnetizing effect, the excitation current needs to be reduced so as to keep the rated voltage (fig. 2.3.5).

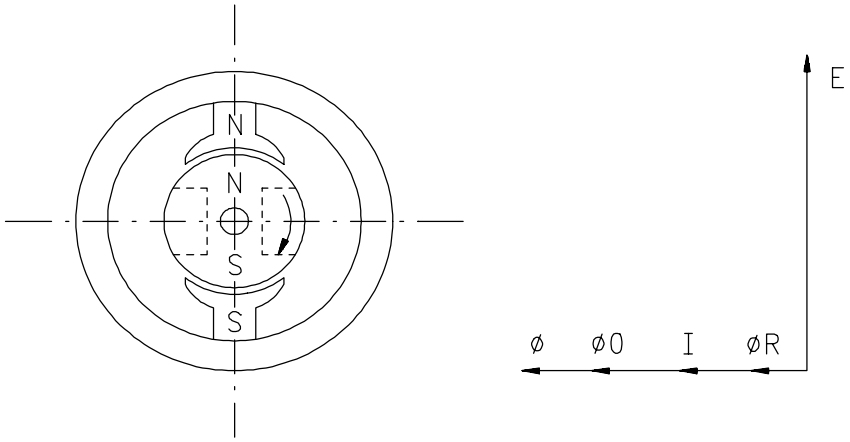

Fig. 2.3.4. – Purely Capacitive Load.

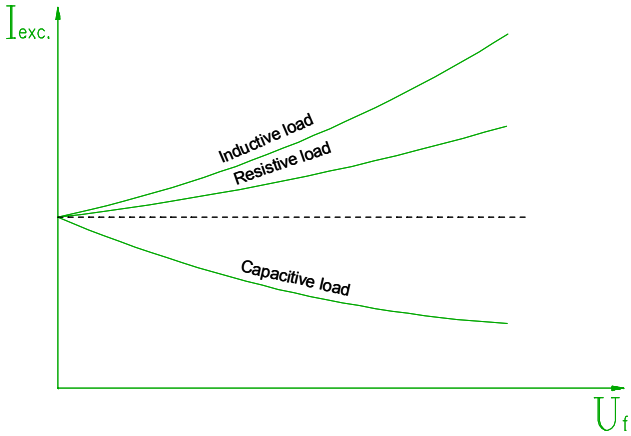

Fig. 2.3.5. – Excitation current variation to keep the armature voltage constant.

d) Intermediate Loads:
In practical terms, we have intermediate dephase loads between totally inductive or capacitive and totally resistive loads. On these cases, the induced field can be decomposed into two fields, one transversal and another de-magnetizing (inductive) or magnetizing (capacitive). Only the transversal field has a braking effect, thus requiring mechanical power from the driving machine. The magnetizing or de-magnetizing effect must be compensated by changing the excitation current.

2.4. CYLINDRICAL AND SALIENT POLE MACHINES

Synchronous generators are manufactured with cylindrical or salient pole rotors.

CYLINDRICAL POLES: These are rotors with regular air gap along the whole iron core outside.

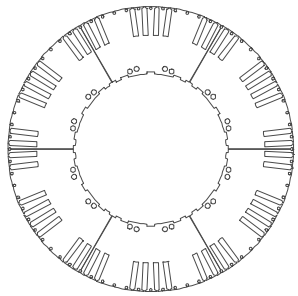

Fig. 2.4.1. – Cylindrical pole rotor.

SALIENT POLES: These are rotors with irregular air gap along the whole iron core outside. On these cases, there are the so called interpolar areas where the air gap is quite big making the poles salient.

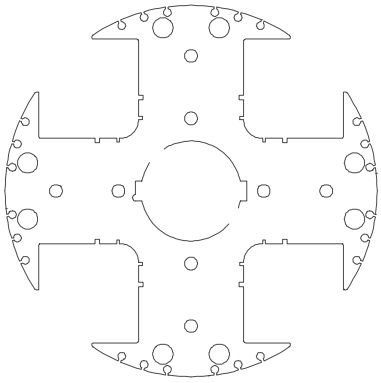

Fig. 2.4.2. – Salient pole rotor.

2.5. REACTANCES

The basic transitory performance analysis of synchronous machines is quite easy due to a linear transformation of variables, where the 3 phase currents of the stator ia, ib, and ic, are replaced by three direct shaft components: the direct shaft component, id, the quadrature shaft component, iq, and a single phase component, io, known as zero sequence component (zero shaft).
For balanced operation at continuous service duty (fig 2.5.1), io is void (so it is not discussed here).
The physical meaning of the direct shaft and quadrature components is the following: The salient pole machine has a preferential magnetizing direction determined by the field pole salience. The permeance along the polar or diriect shaft is slightly higher than occurs along the interpolar or quadrature shaft.

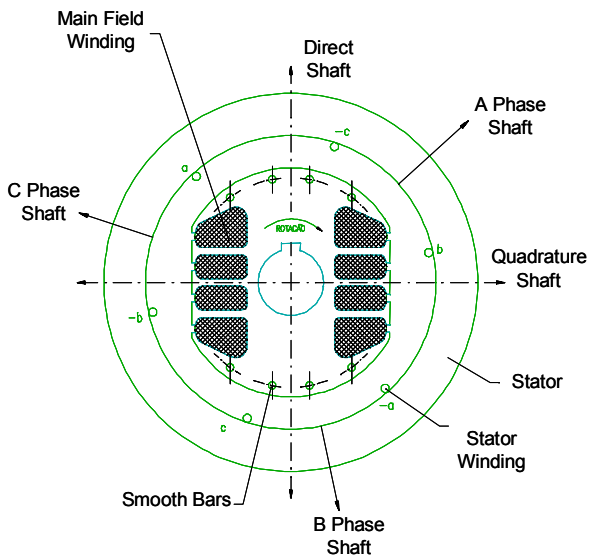

Fig. 2.5.1. – Synchronous Machine Diagram.

Useful knowledge of reactances
An effective rotor circuit, on the direct shaft, besides the main field winding. Is formed by the smoothing bars. Consider a machine operating initially at no load, on a sudden three phase circuit appears on its terminals. On the drawing below, a short-circuit current wave can be noticed, same as it can be obtained from an osciloscope (Fig. 2.5.2).

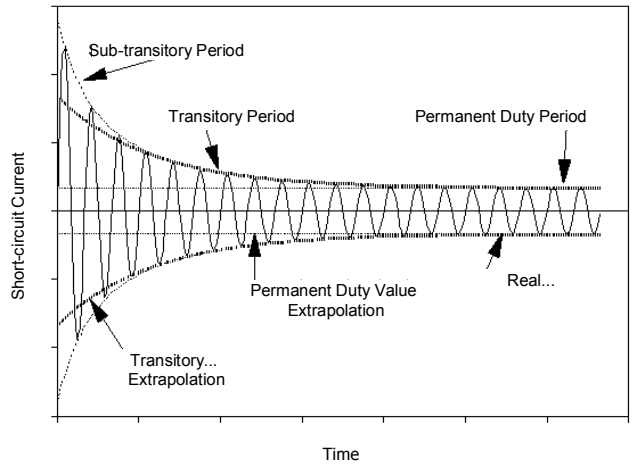

Fig. 2.5.2 – Short-Circuit Symetric Armature Current on a Synchronous Machine.

Sub-transitory Reactance
It is the machine reactance value corresponding to the current that goes through the armature during the first cycles, as you can see on fig 2.5.2 (Sub-transitory Period). Its value can be obtained dividing the armature voltage value before the fault, by the current at the beginning of the fault, to load applied suddenly and to rated frequency.

$$x''d = \frac{E}{I''}$$

Where:
E = Effective voltage value phase to neutral on the synchronous generator terminals before the short-circuit.
I'' = Effective short-circuit current value of the sub-transitory period at continuous service duty. Its value is given by:

$$I'' = \frac{I_m x}{\sqrt{2}}$$

Transitory Reactance
It is the machine reactance value corresponding to the current that goes through the armature after the sub-transitory period, lasting for a high number of cycles (longer time period). Its value can be obtained dividing the armature voltage

corresponding to the initial transitory period by the respective current, at the same load conditions.

$$x'd = \frac{E}{I'}$$

I'= effective short-circuit current value of the transitory time period at continuous service duty. Its value is:

$$I' = \frac{I_m x}{\sqrt{2}}$$

Synchronous Reactance

It is the machine reactance value corresponding to the current at continuous service duty, that is, after the transitory time period, its value can be obtained from the armature terminal voltages at the end of the transitory period divided by the respective current.

The importance of knowing such reactances is on the fact that stator current (armature) after occurring a fault (short-circuit) on the machine terminals there will be values that depend on these reactances.

Thus, the machine performance may be known based on a fault or on the arising consequences.

$$xd = \frac{E}{I}$$

Where:

I = Effective short-circuit current value at continuous service duty.

$$I = \frac{I_{m\,x\,RP}}{\sqrt{2}}$$

The synchronous generator is the only electric system component that has three different reactances, where the values follow the equation:

Xd"< Xd' < Xd

2.6. SALIENT POLE MACHINE POWER

The synchronus machine power is expressed by:

P = m . Uf . If . cosφ

m = Number of phases
Uf = Phase voltage
If = Phase current

The electric output generated by salient pole machines can also be given as function of the load angle that is the result between phasors Uf(phase voltage) and E_0 (induced electrodrive power) determined by the rotor angular position referred to the stator rotating flow (Fig. 2.6.1).

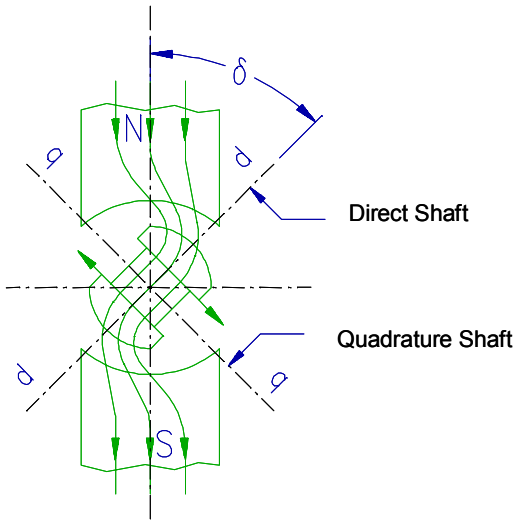

Fig 2.6.1.b – Voltage Diagram – Salient Pole Synchronous Generator.

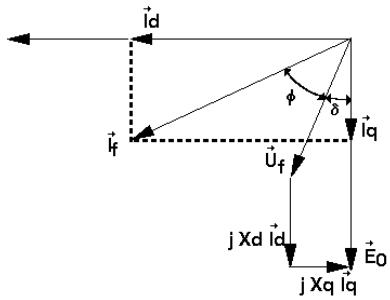

Fig 2.6.1.a – Load Angle on Salient Pole Machines.

Where:

Xd and Xq direct shaft and quadrature reactance respectively.

P = Pd + Pq

Pd = Uf . Id . senφσ

Pq = Uf . Iq . cosφ

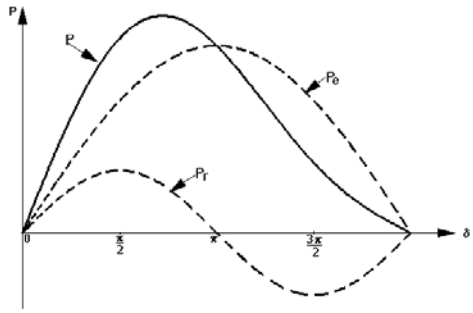

Fig 2.6.2 – Synchronous machine power curve.

The electromagnetic power, which is the output transmitted by the generator rotor to the stator, may be expressed by:

$$P = \frac{m \cdot E_0 \cdot Uf}{xd} sen\delta + \frac{m \cdot Uf^2}{2}\left(\frac{1}{xq} - \frac{1}{xd}\right) sen2\delta$$

$$Pe = \frac{m \cdot E_0 \cdot Uf}{xd} sen\delta$$

The first term of the previous expression is the power that depends on the power supply voltage Uf and on the machine excitation (Fig. 2.6.2).

The second term of the expression:

$$\frac{m \cdot Uf^2}{2}\left(\frac{1}{xq} - \frac{1}{xd}\right) sen2\delta$$

Is additional due to the air gap reluctance difference, which does not depend on the machine excitation (Fig 2.6.2).

2.7. DEFINITIONS

2.7.1. Harmonic Distortion

The ideal format of the voltage waveform of an AC power supply is senoid.
Any voltage waveform that has any harmonic distortion (fig 2.7.1) can be presented as being equivalent to the sum of the fundamental plus a series of AC voltages related harmonically to specific amplitudes.

The distortion may be defined for each harmonic in relation to its amplitude as percentage of the fundamental. The harmonic distortion can be calculated with the application of the following formula:

$$Distortion = \sqrt{\sum_{m=2}^{m=m} \frac{(Em)^2}{E_1}}$$

Where:

Em = Harmonic voltage of "m" order

E1 = Fundamental

In figure 2.7.1.a is represented the waveform taken between generator phase to phase. The distortion calculated was 2.04%. In figure 2.7.1.b we have the waveform taken between phase-neutral. The distortion calculated was 15.71%.

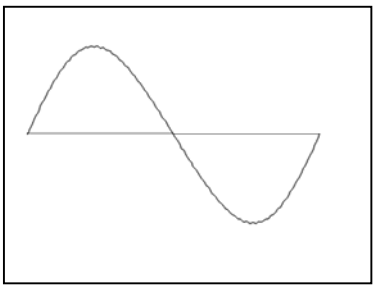

Fig. 2.7.1.a – Waveform with 2.04% of harmonic distortion.

2.7.2. Desplacement factor

Displacement or variation on the senoid waveform may occur on any point of the wave: positive, negative or when crossing at (Fig 2.7.2).

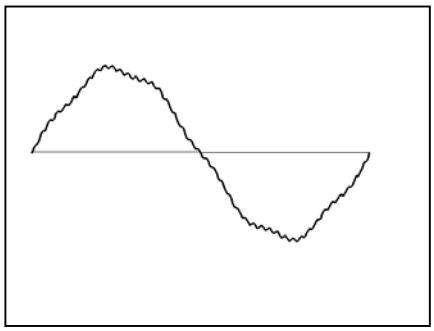

Fig. 2.7.1.b – Waveform with 15.71% of harmonic distortion.

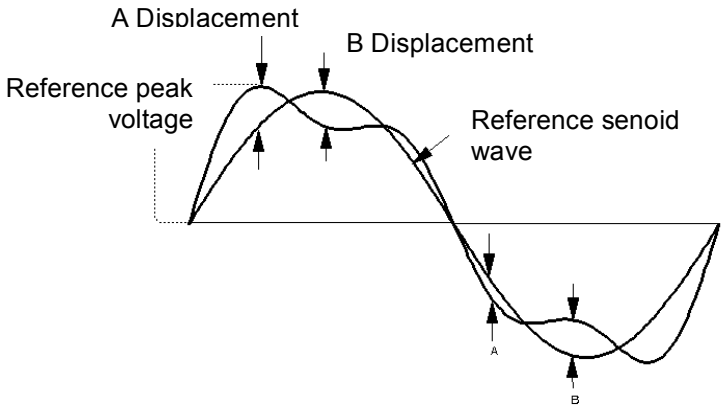

Fig 2.7.2 – Displacement Factor.

The variation amplitude (Fig. 2.7.3) expressed as percentage of the peack value of a reference senoid wave is the displacement factor.

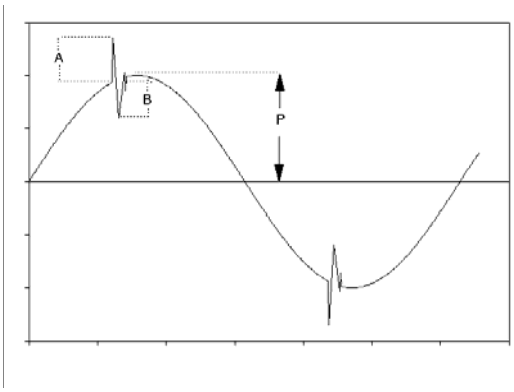

Fig 2.7.3 – Displacement Amplitude.

The displacement factor may be calculated as:

$$Fdev = \frac{Displacement}{Vpeak}$$

2.7.3. Voltage Modulation

It is the cyclic voltage amplitude variation caused by the gegulator variation or by the cyclic load variation.

2.7.4. Angular Displacement

The voltages on a three phase system are displaced at 120º. If this displacement is different than 120º, the referred value will be the displacement.

2.7.5. Voltage Unbalance

Voltage displacement is the difference between the highest and the lowest power supply voltages and it can be expressed as percentage of the average phase voltage.

Ex:
Phase U to V -> 208 V (1.6% above average)
V to W -> 204 V (0.33% below average)
W to U -> 202 V (1.3% below average)
Average: 204.67 V
Variation: 6V (2.9%)

2.7.6. Voltage Transient

These short duration voltage peaks that appear from time to time and they can achieve a high number of Volts (Fig.2.7.4).

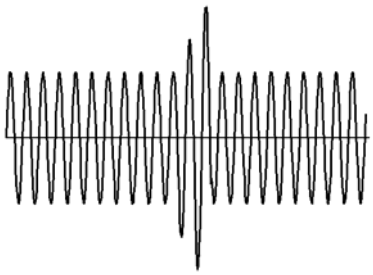

Fig 2.7.4 - Voltage Transient.

2.7.7. Voltage Tolerance

Maximum allowable voltage displacements are usually expressed as percentage of the rated voltage, for example:

+ 5% -> 105% continuously
- 7.5% -> 92.5% continuously

3. WEG GENERATORS

WEG MÁQUINAS currently manufactures two basic lines of synchronous generators: S and GTA lines. The S line was designed to meet specific applications and it consists of engineered products (motors and generators) with frames sizes 355 up to 2000 at low and high voltage. They are manufactured in steel ewlded frames, open and enclosed, with air-air or air-water heat exchanger; mountings B3, D5, D6 or V1. They are usually driven by hydraulic or steam turbines.

The GTA line replaces the old DK and BTA lines, consisting of series standard, telecommunication and marine lines only (generators), with frames ranging from 200 up to 400, only at low voltage. Manufactured in calendered steel plates, they are offered as open machines, in the mountings B15T or B5/B3T. They are usually drive by diesel engines. Main advantages of this line compared to previous BTA line include:

- Winding pitch 2/3, low harmonic distortion and low subtransitory reactance, which makes it suitable to drive deforming loads with high 3rd hamonic components;

- Permanent magnet exciter making the brushing under any condition easier;

- Easy maintenance due to their rugged construction; easy access to rectifiers and voltage regulator;

- Easy to perform maintenance on the short-circuit current as it is fitted with auxiliary coil to power supply the voltage regulator.

3.1. NORMAS APLICÁVEIS

Machines are designed, manufactured and tested as per ABNT, IEC and DIN Standards, whenever applicable. Spacifically, we can include:

- VDE 0530- Electric Rotating Machines (Specification and Test Characteristics).

- NBR 5117-Synchronous Machines (Specification).

- NBR 5052-Synchronous Machines (Test Method).

3.2. BRUSH EXCITATION GENERATORS

3.2.1. SL Type (old DL)

On the SL generator, the field is DC power supplied by brushes and slip rings, and the alternating current is removed from the stator (fig.3.2.1); on this system the field is usually powered by an exciter called static exciter. The generator outlet voltage is kept constant for any load and any power factor as it cnstantly controls an outlet voltage. When operated under rated speed, the brushing process starts by the little generator residual voltage.

ADVANTAGES: Shorter reponse time to recover the voltage.
Lower voltage drop on induction motor starting.

DISADVANTAGES: It requires periodical maintenance on the brush and brush holder set.
It is not recommended to be used on data processing centers, telecommunications as it can cause radio interference due to bad brush contact.

3.3. BRUSHLESS GENERATORS

For industrial application, the following generator types are available:

a) SP (old DKBH and DKBP) – The SP generator is fitted with an auxiliary exciter to the voltage regulator, consisting of permanent magnets. On the generator, the voltage coming from the auxiliary exciter is rectified, sent to fixed pole generator (main exciter) and rotating bridge rectifier. Then the continous voltage is applied to the machine rotor (Fig. 3.3.1).
On this system, brushes and brush holders are eliminated as the generator field power supply is obtained through the induced voltage on the exciter, and the only interaction is the magnetic field.
On the SP line, the auxiliary exciter is mounted on a separate box of the machine main stator.
The old D line is available in two variations:
- DKBH: Auxiliary exciter without magnets, mounted attached to the generator. On this type of exciter, if the machine remains stopped for long periods of time, it may be difficult to start the brushing.
- DKBP: Auxiliary exciter with magnets, mounted outside of the generator frame (mounted on the non-drive endshield).

b) SS (old DKBL) – On the SS generator, the voltage power supply is obtained through TAP's of the own winding for low voltage or TP's (potential transformers) for high voltage. Then, the voltage on the generator is rectified and sent to a fixed pole generator (main exciter) and rotating bridge rectifier.

c) GTA (old BTA) – Brushless generator without auxiliary exciter. It is fitted with an independent auxiliary winding, placed in the armature slots (auxiliary coil). It serves to supply voltage to voltage regulator. (Figs. 3.3.2.a and 3.3.2.b).
The auxiliary coil is an auxiliary winding that is fitted into one of the slots of the main machine stator. Its main function is to power supply the main exciter field, which is regulated and rectified by the voltage regulator.
At normal generator operating conditions, a generator rated frequency single phase voltage is generated. Depending on the type of load (resistive, inductive or capacitive), slight distortions on the waveform are caused.
On short-circuit situations on the generator outlet, a 3rd harmoninc single phase voltage is produced that powers the voltage regulator and maintains the short circuit.

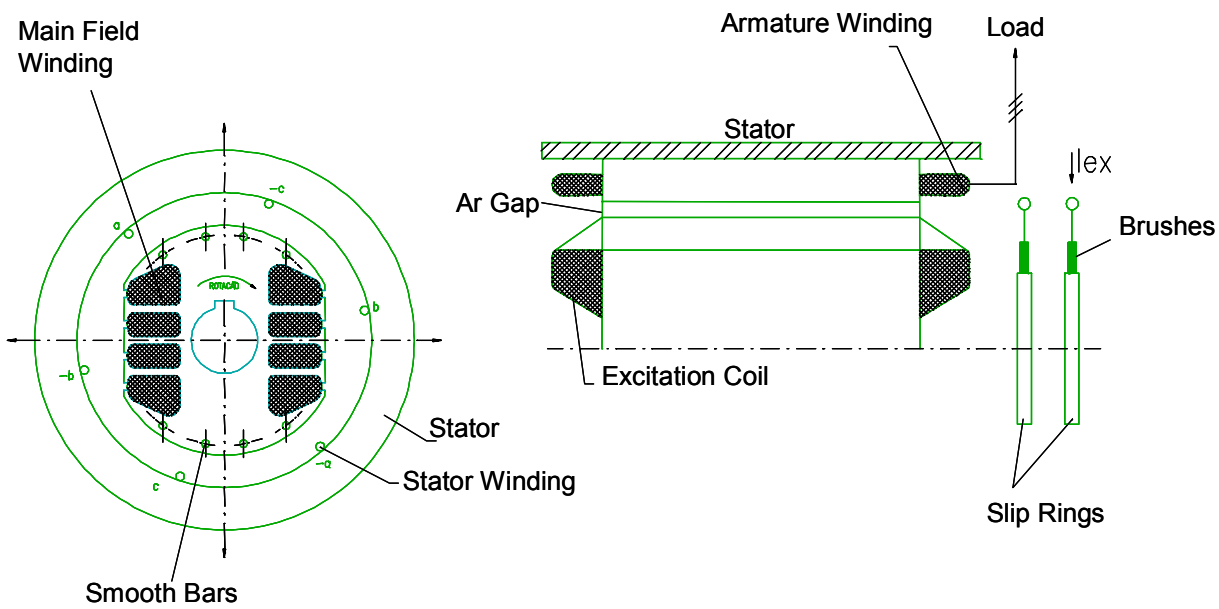

Fig. 3.2.1 – Brush Excitation Generator.

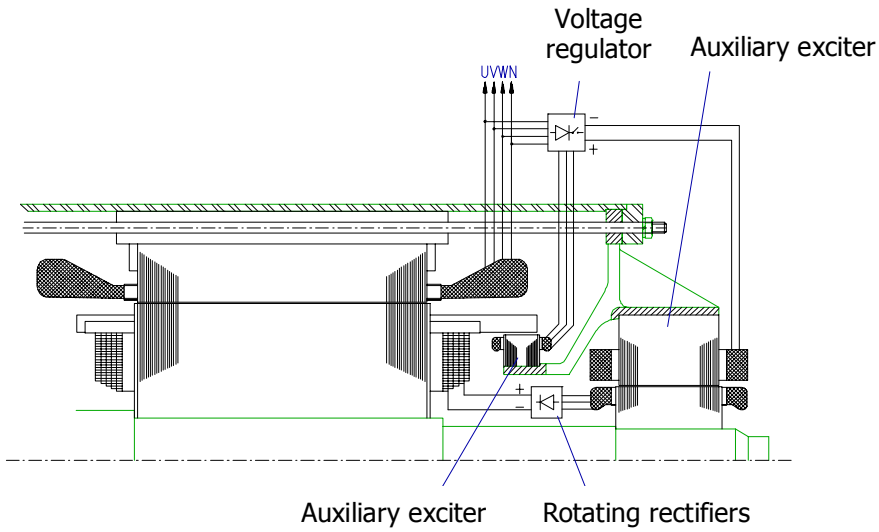

Fig. 3.3.1 – DKBH Generator (old line - with auxiliary exciter).

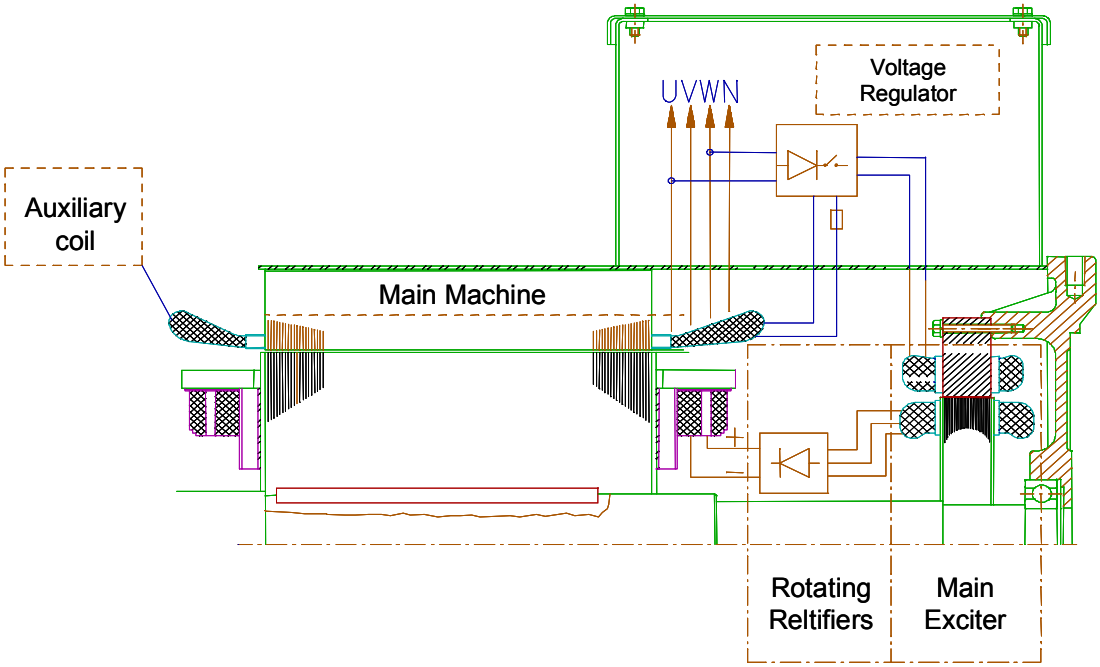

Fig. 3.3.2.a - BTA Generator (old line).

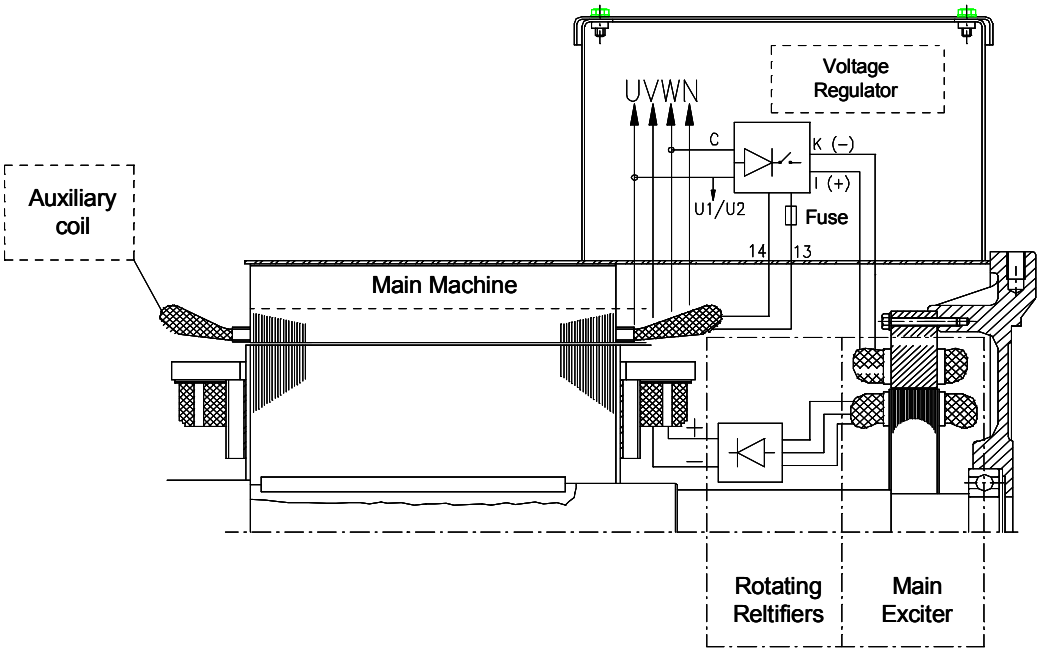

Fig. 3.3.2.b – GTA Generator (current line).

3.4. SPECIAL APPLICATION BRUSHLESS GENERATORS

a) TELECOMMUNICATIONS– Telecommunication generators are manufactured electrically and mechanically as per TELEBRÁS Standard specifications. The most commnly applications are emergency diesel sets for telecommunication centers, transmition towers, radars, radio systems, airports and other critical applications.

Advantages:

- Brushes and brush-holders are not required which allows less maintenance. Only bearing relubrication requires specific care.
- It does not produce radio-interference caused by bad brush contact.
- Waveform deformation caused by loads will not interfere on the regulation as the regulator is powered by an auxuliary coil, independent from the outlet voltage.
- It allows easy manual voltage control.

Technical features:

- Applicable: VDE, ABNT, IEC and TELEBRÁS.
- Mounting: B5/B3T with flange for diesel engine coupling.
- Direct shaft sub-transient reactance (xd") below 12%.
- Total harmonic distortion below 3% for linear load.
- Voltage regulation precision 0,5% for any load value with power factor between 0.8 and 1.0.
- Voltage transitory for degree of 100% of load: 10% d of the rated voltage.
- Response time for voltage recovery, below 0.5 seconds.
- Variations of 5% on the diesel engine speed will not affect the voltage regulation.
- Rated voltage adjustment range by potentiometers: normal adjustment at 15%, fine adjustment at 5%.
- Allowable overload: 10% for 1 hour every 6 hours, of 200% for 15 seconds every hour.

b) NAVAL – Naval application generators are designed and manufactured to meet technical parameters in accordance with classifying entities and applicable standards.

c) MARINE – Marine duty generators are designed and manufactured to meet technical paramenters and characteristics for marine environment applications. However, they do not follow classifying entities.

3.5. SYNCHRONOUS MOTORS

Due to regulation No. 85 of DNAEE dated 15/03/1992 that changed the minimum pawer factor value from 0.85 to 0.92, it has been more difficult to meet this limit.
One of the applicable solutions to get power factor value within the range specified by the regulation is the application of synchronous motors or compensating machines.
The main advantage of using these machines is that they allow easy adjustment and continuous maintenance of pre-adjusted power factor value.
Another advantage of the synchronous motor is that it can drive a load (mechanical) while it operates as power factor compensator.
Another positive features of synchronous motors is their dynamic operation as they have the same speed of the armature rotating field at permanent service duty and due to the fact they do not present starting torque.
On this way, these motors require a starting method. In practical terms, the most common practice is to start these motors same it is done with asynchronous motors and then excite the inductor (to power the field winding with DC current), to provide synchronization.
For salient pole synchronous motors, the starting method consists on the application of copper, brass or aluminum bars on the polar shoes, which are short-circuited at thier ends through slip rings, pretending it is cage of a assynchronous induction motor. Fig. 3.5.1.a shows the short-circuited bars on the polar shoes. The starting cage is also called smooth winding, once, besides supplying the starting torque, smooths the variations caused by load variations for further motor speed stabilization.
The starting of a brushless synchronous motor is provided with short-circuited field winding (excitation) and with the induced (armature) connected to the power supply. The filed winding is short-circuited to avoid excessively high induction of phases between their terminals, what would cause insulation praçãoo.
The armature is connected to an alternating voltage power supply and then occurs the asynchronous motor torque and the rotor accelerates close to the synchronous speed without, however, reach it.
When the rotor speed is about 95% of the synchronous speed, the field winding is DC powered. The magnetic filed created by the magnetic winding entrelaça-se with the armature magnetic field resulting in the synchronism torque and makes the rotor to follow the armature field and mives the synchornous speed.
This transitory phenomenon is called "synchronism".

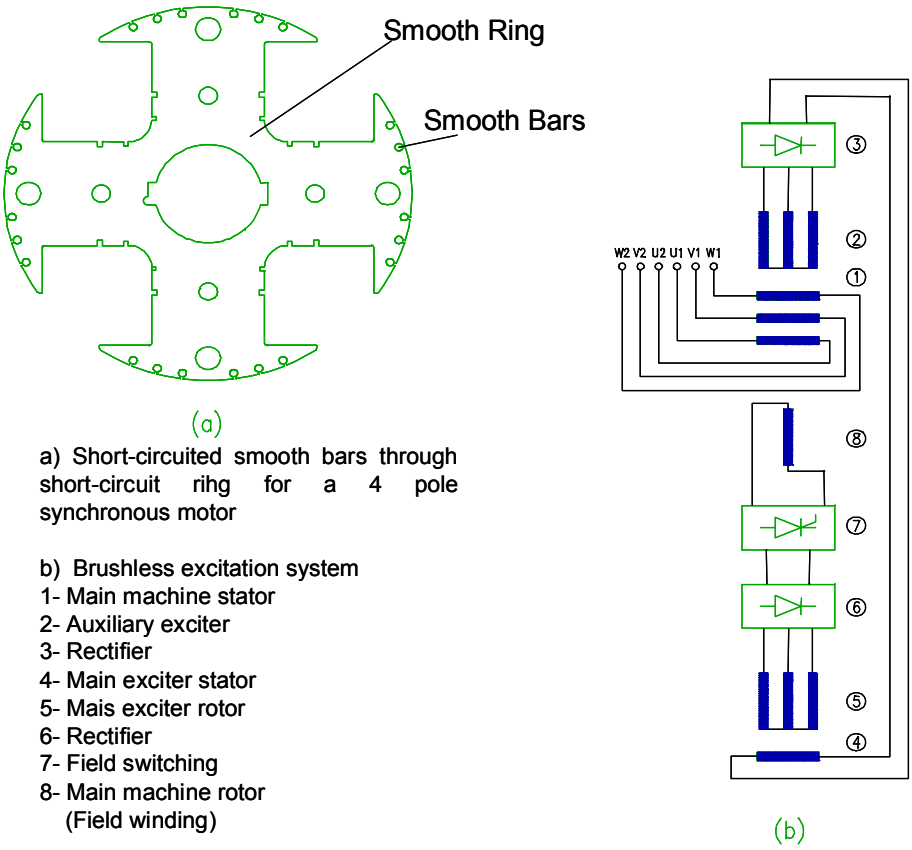

a) Short-circuited smooth bars through short-circuit rihg for a 4 pole synchronous motor

b) Brushless excitation system
1- Main machine stator
2- Auxiliary exciter
3- Rectifier
4- Main exciter stator
5- Mais exciter rotor
6- Rectifier
7- Field switching
8- Main machine rotor
(Field winding)

Fig. 3.5.1. - Field Plate Profile (a) and Synchronous Motor Diagram (b).

Brushless Excitation System for Synchronous Motor

The brushless excitation system consists of:
- Auxiliary exciter.
- Main exciter.
- Field winding.

The auxiliary exciter is an external pole machine. Its rotor consists of axial bars fitted in the polar shoes of the main machine rotor which are considered their excitation poles. Designed with lamination plates, the stator is fitted with a three phase winding.
The main exciter is a three phase current generator of salient poles with accomodate the wich excitation field coils series-connected.

The main exciter rotor is laminated and its slots accommodate a star-connected three phase winding. The common point of this star connection is not accessed. From each of the star connection leave two leads for rotating rectifiers placed on two dissipating supports.
The field winding is mounted on the main machine rotor, with the coils wound on the excitation poles. The excitation system diagram of the brushless synchronous motor is shown in fig. 3.5.1.b.

The main machine stator which is power supplied by terminals U1, V1, W1 induces through axial bars fitted into the rotor a three phase voltage into the auxiliary exciter. This voltage is rectified and powers the main exciter stator. The voltages induced into the main exciter rotor is rectified and powers the field winding.
On the starting, a high voltage is induced into the rotor making tiristor switching, short-circuiting the field winding. When voltage falls down to 130V (approximately 95% of the speed), the tiristors will no longer operate and the field winding starts receiving rectified voltage.

Advantages of this system include:
- Brushes and brush holders are not required;
- Radio-interference is not passed through due to bad brush contact;
- Less maintenance services. The only care is required to bearing relubrication.

3.6. VOLTAGE REGULATOR

The voltage regulator is an electronic and automatic device. Its main function is to keep the voltage constant, independently from load variations. It rectifies the three phase voltage coming either from the auxiliary coil, from exciter stator or from the main machine armature TAP's, which is taken through a power tiristor to the main exciter field winding. It is also fitted with protection circuits to ensure reliable generator control.

3.7. VOLTAGE REGULATION TIME (REPONSE TIME)

As regulation time it is understood the time going from the starting voltage drop up to the moment the voltage stays within the stationary tolerance interval, (for example) 0.5 and remains the same (ta in fig. 3.7.1).

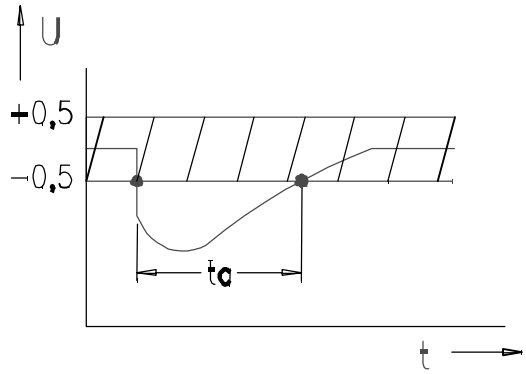

Fig. 3.7.1 – Voltage Regulation Time.

The exact regulation time depends on several factors, so it can only be indicated as an approximate value.

Fig. 3.7.2 gives an approximate indication on the regulation time to be considered, and they apply to all rated load degrees.
At different conditions compared to the above, the time periods may be calculated proportionally to the voltage drop.

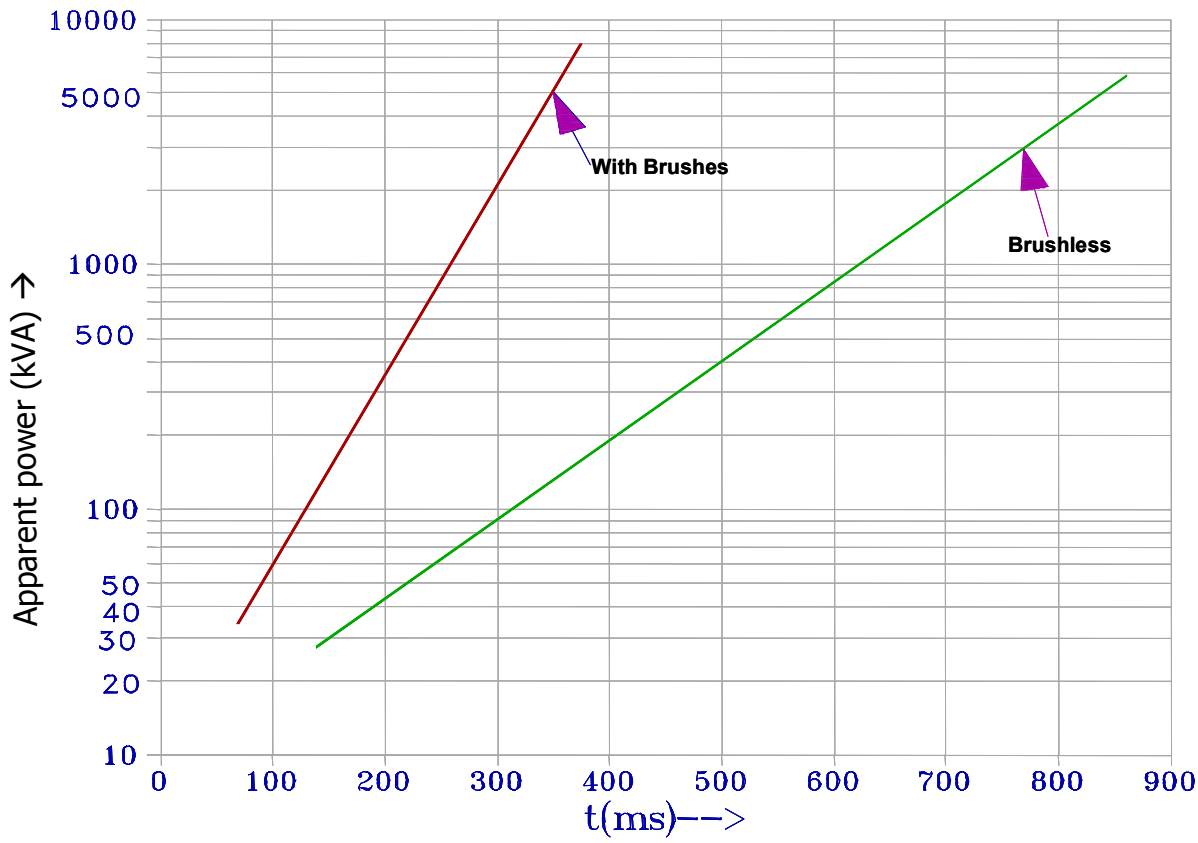

Fig. 3.7.2 – Voltage Regulation Time.

3.8. NOMENCLATURE OF WEG SYNCHRONOUS MACHINES

G T A . 3 1 5 M I 3 1 S 0 4 C	
Machine Type	
G	Non engineered Synchronous Machine
S	Engineerd Synchronous Machine

G T A . 3 1 5 M I 3 1 S 0 4 C	
Features	
T	Brushless Generator with Auxiliary Coil
P	Brushless Generator with Auxiliary Exciter
S	Brushless Generator withour Auxiliary.....
L	Generator with Brushes
D	Motor with Brushes
E	Brushless Motor without Auxiliairy Exciter
F	Brushless Motor with Auxiliary Exciter
M	Single Phase Brushless without Auxiliary Exciter
N	Single Phase Brushless with Auxiliary Exciter
Q	Single Phase Brushless with Auxiliary Coil

G T A . 3 1 5 M I 3 1 S 0 4 C	
Cooling Method	
A	Open Self-ventilated
F	Air-air Heat Exchanger
W	Air-water heat exchanger
I	Independent forced ventilation
D	Self-Ventilated by Ducts
T	Forced Ventilation by Ducts
L	Forced Ventilation with Air-water Heat Exchanger
V	Open Forced Ventilation

G T A . 3 1 5 M I 3 1 S 0 4 C
Frame .160 up to 2000

G T A . 3 1 5 M I 3 1 S 0 4 C
Frame length
S, M, L, A, B, C, D, E ,F

G T A . 3 1 5 M I 3 1 S 0 4 C	
Applications	
I	Industrial
M	Marine
T	Telecommunications
N	Naval
E	Special

G T A . 3 1 5 M I 3 1 S 0 4 C
Core Code
00 up to 99

G T A . 3 1 5 M I 3 1 S 0 4 C	
Rotor Type	
S	Salient Poles
L	Cylindrical Poles

G T A . 3 1 5 M I 3 1 S 0 4 C
Number of Poles

GTA.315MI31104C	
Calculation Type	
C	Inquiry
E	Specification for OP,AM and AT
K	Catalog

4. AMBIENT CHARACTERISTICS

Among others, two factors are important to determine the allowable output: the cooling means temperature and the altitude where the generator will be installed.

a) Cooling Means
On most cases, ambient air not exceeding 40ºC and free of harmful materials.

b) Altitude (not above 1000m above sea level)
Even on these altitude and ambient temperature values, ambiente considera-se condições normais que o gerador deve fornecer, sem sobre aquecimento, sua potência nominal.

4.1. ALTITUDE

Generators operating at altitudes above 1000m present overheating problems caused by air rarefaction and, as a consequence, there is a reduction on its cooling capacity.
The lack of heat exchange between generator and cooling air, requires loss reduction, which also means output reduction.
Generators have a heating system directly proportional to the losses and these losses vary approximately at a quadratic ratio with the output.

4.2. AMBIENT TEMPERATURE

Generators that operate at temperatures below 20ºC present the following problems:

a) Excessive condensation which requires additional drainage or application of space heaters, if the generator remains long period of time stopped.

b) Forming ice on the bearings causing grease hardening of grease or any other bearing lubricant, requiring special lubricants or anti-freezing grease.
On generators that operate continually at ambient temperature above 40ºC, the winding may reach temperature that will affect the insualtion. This fact must be compensated by a special generator design, with the application of special insulating materials or by reducing its rated power.

4.3. DETERMINATION OF GENERATOR USEFUL POWER ON DIFFERENT TEMPERATURE AND ALTITUDE CONDITIONS

Combining the variation effects of temperature and altitude to dissipation capacity, the generator output can be obtained multiplying the useful power by the multiplying factor found in fig.4.3.1.
The machines can be operated at rated output at different altitudes as long as the following temperatures are not exceeded:
0 to 1000m 40ºC
1000 to 2000m 30ºC
2000 to 3000m 20ºC
3000 to 4000m 10ºC

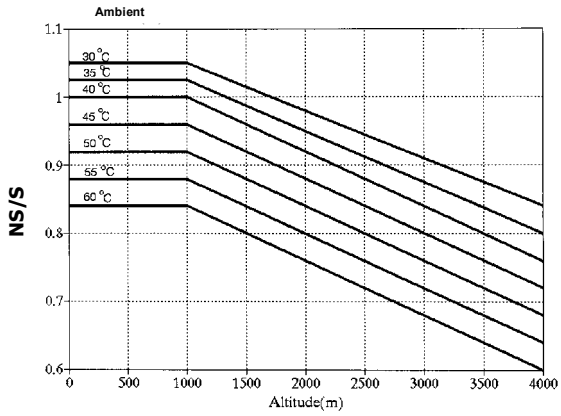

Fig. 4.3.1. Power Diagram referred to Altitude and Ambient Temperature.

4.4. AMBIENT ATMOSPHERE

4.4.1. Aggressive Environments

Aggressive environments, such as: ship yards, port facilities, fish industry and marine duties, chemical and petrochemical industry, require suitable equipment to withstand such environments with high reliability, avoiding any operating problem.
For the application of generators on these aggressive environments, an inquiry should be sent to the factory.
For marine application generators, they present special characteristics based on the construction, inpection requirements and and tests required by classifying entity standards, such as:
- American Bureau of Shipping;
- Bureau Veritas;
- Lloyds Register of Shipping;
- Germanischer Lloyd.

And other as per table 4.4.1, which determine the maximum catalog power limit.

POWER REDUCTION AS PER CLASSIFYING ENTITIES AND STANDARDS

STANDARD	MAX. AMBIENT TEMPERATURE ºC	OUTPUT IN %	ALLOWABLE OVERLOAD WITHOUT AFFECTED HEATING		NOTE
			%	TIME	
VDE 0530 1972	40	100	50	15sec	
Germanischer Lloyd 1973	45	96	50%p/ cosφ 0.5	2min	
IEC 1969	50 40	76 100	50	15sec	1) 2)
Lloyds Register 1975	45	92	50	15Sec	
ABS 1975	50	88			
NV 1976	45	92	50%p/ cosφ 0.6	2min	
BV 1977	50	92			
RIN to 1976	50	92	50	15sec	
See register of UdSSR 1975	45	96	50	2min	

Table 4.4.1 – Maximum catalog output referred to Ambient temperature.

1) Superior line is for ships; inferior line is for land installations
2) Insulation class "B". Class "F", only with special authorization.
3) Class "F" machines operating at class "B", the output must be reduced to 0.84 of the rated output.
4) When a filter is attached, an output reduction of 5% will be required.

4.5. DEGREE OF PROTECTION

Based on the application site and accessibility, electric equipment enclosures must offer a certain degree of protection.
For example, an equipment to be installed on an application subject to water jets must have an suitable enclosure to withstand such water jets, under certain pressure values and incidence angle, avoiding water penetration.

4.5.1. Identification Code

IEC and ABNT-NBR 6146 Standards define the degrees of protection for the electric equipment with the application of IP characteristic letters followed by two digits.

1º Digit: Indicates the degree of protection against penetration of foreign solid materials and accidental contact.
0 - unprotected.
1 - foreign materials with dimensions greater than 50mm.
2 - same, greater than 12mm.
4 - same, greater than 1mm.
5 - protection against accummulation of harmaful dust to the generator.

2º Digit: Indicates the degree of protection against penetratin of water into the generator.
0 - unprotected.
1 - water drops vertically.
2 - water drops up to an inclination of 15º vertically.
3 - rain up to an inclination of 60º vertically.
4 - water splash from all directions.
5 - water jets from all directions.
6 - sea waves.
7 - temporary immersion.
8 - permanent immersion.

The combination between the two digits, that is, between the two protection criteria, are summarized in table 4.5.1.

Based on standards, the generator qualification on each degree for each digit is clearly defined through standardized tests and not subject to double interpretation, as occurred previously.

GENERATORS	PROTECTION CLASS	1º DIGIT		2º DIGIT
		PROTECTION AGAINST CONTACT	PROTECTION AGAINST FOREIGN MATERIALS	PROTECTION AGAINST WATER
OPEN	IP00	UNPROTECTED	UNPROTECTED	UNPROTECTED
	IP02	UNPROTECTED	UNPROTECTED	WATER DROPS UP TO AN INCLINATION OF 15º VERTICALLY
	IP11	ACCIDENTAL HAND TOUCH	FOREIGN SOLID MATERIALS WITH DIMENSIONS GREATER THAN 50mm.	WATER DROPS VERTICALLY
	IP12			WATER DROPS UP TO AN INCLINATION OF 15º VERTICALLY
	IP13			RAIN UP TO AN INCLINATION OF 60º VERTICALLY.
	IP21	FINGER TOUCH	FOREIGN SOLID MATERIALS WITH DIMENSIONS OF12mm.	WATER DROPS VERTICALLY
	IP22			WATER DROPS UP TO AN INCLINATION OF 15º VERTICALLY
	IP23			RAIN UP TO AN INCLINATION OF 60º VERTICALLY
	IP44	TOUCHES WITH TOOLS	FOREIGN SOLID MATERIALS WITH DIMENSIONS GREATER THAN 1mm	SPLASHES FROM ALL DIRECTIONS
ENCLOSED	IP54	FULL PROTECTION AGAINST TOUCHES	PROTECTION AGAINST ACCUMULATION OF HARMFUL DUST	SPLASHES FROM ALL DIRECTIONS
	IP5			WATER JETS FROM ALL DIRECTIONS

Table 4.5.1 – Degrees of Protection.

4.5.2. Usual Types

Although the indicative degree of protection digits may be combined in several ways, only few protection types are commonly applied. They are IP21, IP23 (open generators). For special aggressive applications, IP 54 degree of protection (dusty environment) is also applied and IP55 (cases where the equipment is washed down periodically with hoses, such as paper mills).

4.6. NOISE LEVEL LIMITS

IEC 39.9 and NBR – Standards – limit designs 3:02.8-001 specify maximum noise levels in decibels, in the ponderation scale A, dB (A), for electric rotating machine noises transmitted through the air, as per Table 4.6.1.

DEGREES OF PROTECTION		IP22	IP44	IP22	IP44	IP22	IP44	IP22	IP44	IP22	IP44	IP22	IP44
RATED SPEED – RPM		n > 960		960 < n ≤ 1320		1320 < n ≤ 1900		1900 < n ≤ 2360		2360 < n ≤ 3150		3150 < n ≤ 3750	
RATED OUTPUT RANGES, P		NOISE LEVEL dB(A)											
GENERATORS													
kW	HP												
P < 1.1	P < 1.1	71	76	75	78	78	80	80	82	82	84	85	88
1.1 < P < 2.2	1.5 < P < 3.0	74	79	78	80	81	83	83	86	85	88	89	91
2.2 < P < 5.5	3.0 < P < 7.5	77	82	81	84	85	87	86	90	89	92	93	95
5.5 < P < 11	7.5 < P < 15	81	85	85	88	88	91	90	94	93	96	97	99
11 < P < 22	15 < P < 30	84	88	88	91	91	95	93	98	96	100	99	102
22 < P < 37	30 < P < 50	87	91	91	94	94	97	96	100	99	103	101	104
37 < P < 55	50 < P < 75	90	93	94	97	97	99	98	102	101	105	103	106
55 < P < 110	75 < P < 150	94	96	97	100	100	103	101	105	103	107	104	108
110 < P < 220	150 < P < 300	97	99	100	103	103	106	103	108	105	109	106	110
220 < P < 630	300 < P < 860	99	101	102	105	106	108	106	110	107	111	107	112
630 < P < 1100	860 < P < 1500	101	103	105	108	108	111	108	112	109	112	109	114
1100 < P < 2500	1500 < P < 3400	103	105	108	110	110	113	109	113	110	113	110	115
2500 < P < 6300	3400 < P < 8600	105	108	110	112	111	115	111	115	112	115	111	116

Table 4.6.1 – Noise level dB(A).

4.7. VIBRATION

Table 4.7.1 indicates allawable values for maximum vibration speed for different frames within 3 levels of balance as follows:

Normal, Reduced and Special, as per onforme DIN 45665 Standard.
Generators are usually balanced as per degree N.

BALANCE	SPEED RANGE	SPEED AND VIBRATION LIMIT VALUE VEF AND PEAK VALUE, EQUIVALENT TO VIBRATION SPEED: veq - √2.vef 2 in mm/s for frame:					
		80 to 132		160 to 225		250 to 315	
		vef	veq	vef	veq	vef	veq
N (normal)	600 up to 1800	1.80	2.50	2.80	4.00	4.50	6.30
	Above 1800 up to 3600						
R (reduced)	600 up to 1800	0.71	1.00	1.12	1.60	1.80	2.50
	Above 1800 up to 3600	1.12	1.60	1.80	2.60	2.80	4.00
S (special)	600 up to 1800	0.46	0.63	0.71	1.00	1.12	1.60
	Above 1800 up to 3600	0.71	1.00	1.12	1.60	1.80	2.50

Table 4.7.1 – Vibration Limit.

For lower vibrations, level S must be considered, divided by 1.6.
Only for pure senoid vibrations, it is possible to apply a simple calculation of the vibration amplitude.

The measuring equipment must comply with the requirements of DIN 45666 Standard. Not withstanding special specifications, N level values apply to all electric machines.

4.8. COOLING

Generator losses can not be avoided and the heat generated by such losses must be dissipated, that is, transferred to the generator cooling means – usually the ambient air.The way the heat is exchanged between generator heated parts and ambient air is what will define the generator COOLING METHOD. The usual systems are as follows:

4.8.1. Open generator

It is a generator where the ambient air circulates inside the generator in contact with the heated parts that must be cooled down.
On this system, the generator presents IP21 or IP23 protection. It is fitted with an internal fan coupled to the shaft.
The fan sucks the embient air, which, after going through the machine, is again blown hot to the ambient air.
The open generator, that is, that not having any restriction to free circulating ambient air inside the generator, is rarely used. In fact, air inlet and outlet use to be partially protected, based on several degree of protection that were described in item 4.5.
Figure 4.8.1 shows the cooling circuit diagram of the self-ventilated generator. The protection on this case is IP23, once the outlet is fitted with vents that protect the generator against water at an inclination of 60º. For cases of IP21 degree of protection, the vent is replaced by a grid.

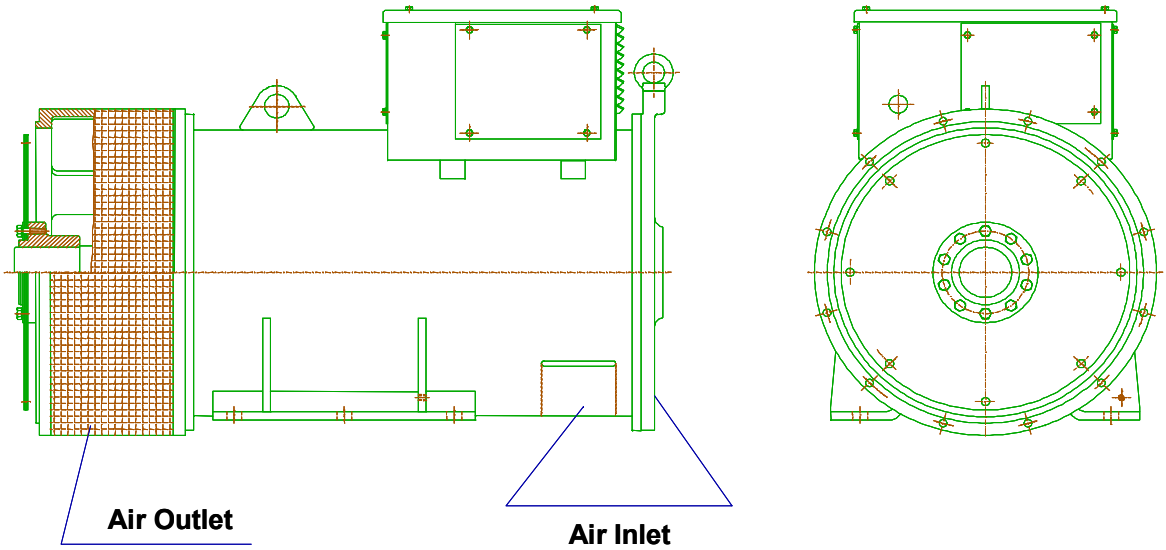

Fig 4.8.1 – Open Generator.

4.8.2. Totally Enclosed Generator

"Enclosed Generator" is such that there is no exchange of cooling means and the frame outside, which does not need to be necessarily sealed (Definition of ABNT).
The ambient air is separated from the generator inside air not getting in direct touch with generator inner parts. The heat exchange is all made on the generator outside surface.
The generator is not "sealed", that is, the mounting clearances do not fully block the penetration of the ambient air into the generator and the air outlet from inside to outside.

For example:
When generator starts its operation, the inside air becomes heated up and expands, creating a slight difference of pressure allowing a little portion of air to "leave" the generator for the ambient. When the generator stops, the inner air cools down and se contrai, allowing a little portion of outside air penetrates into the generator. So the generator "breaths" due to temperature variations.
Depending on the way how the heat is exchanged on the generator outside surface,
The following totally enclosed generators are available:

a) Totally enclosed generator with air-air heat exchanger
The generator is fitted with two fans coupled to the shaft, one internally and another externally. The heat exchanger is placed on the top of the generator.

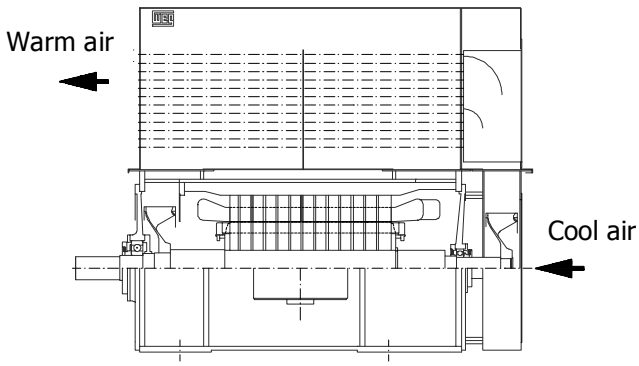

Fig. 4.8.2 Generator cooling with air-air heat exchanger.

The heat exchanger is built with tubes placed axially and mounted on top of the generator. The tube is manufactured with aluminum, alloy ABNT 1100 and, on some applications, it is manufactured with phosphatized steel and anti-corrosive protection.

b) Totally enclosed generator with air-water heat exchanger
The generator is fitted with a fan coupled to the shaft. Fig. 4.8.3 shows generator cooling circuit diagram with air-water heat exchanger.

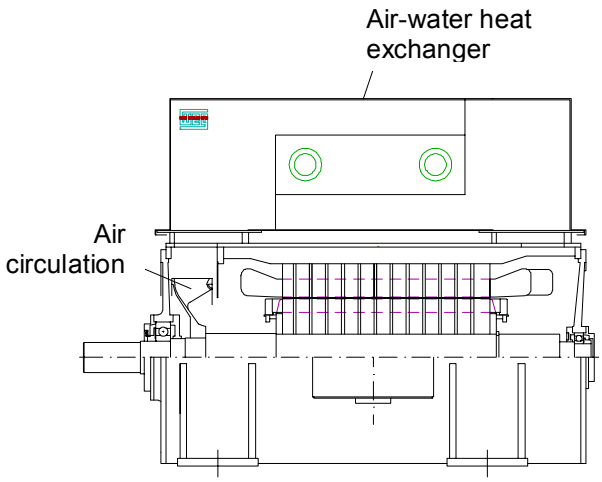

Fig 4.8.3 – Cooling system of a air-water heat exchanger generator.

4.9. WEATHERING PROOF GENERATORS

The letter (W), placed between letter IP and the degree of protection (indicative digits) indicates that the generator is protected against weathering.

4.10. ACCESSORIES/SPECIAL FEATURES

4.10.1. Space Heater

Space heaters are applied on generators that are installed in excessively moinstured environments to avoid water condensation when remain stopped for a long period of time due to the fact that the winding becomes heated up slightly above the ambient temperature (5 to 10ºC).

The application is optional, either requested by the customer or recommended when used on aggressive environments.

Depending on the resistance voltage and on their connection method, space heaters may operate at power supply of 110V, 220V and 440V. The resistance power supply voltage must be specified by the customer. Depending on the frame size, space heaters described in table 4.10.1. will be used.

FRAME	OUTPUT (W)
160	48
225	90
250	90
280	180
315	180
355	180
400	180
450	180

Table 4.10.1 – Space Heater Power by Frame Size.

4.10.2. Electric generator thermal protection

The thermal protection is provided with thermoresistances (calibrated resistance), thermistors, thermostats or thermal protectors. Detector types to be used are specified based on the insulation temperature class applied, on machine type and on customer requirements.

4.10.2.1. Thermoresistances (Pt-100)

These are elements where their operation is based on the resistance variation characteristics with the temperature, typical of few materials (usually platinum, niquel or copper). They are fitted with calibrated resistance which varies lineraly with the temperature, allowing a **continuous** generator heating process by the controller display with high precision and response sensitivity. Their application is really wide on several temperature measurement and automatization techniques in the general industry. They are usually applied on high responsibility installations, such as on sleeve bearings. A single detector may serve as alarm and tripping.

Disadvantage:
Cost of sensors and constrol short-circuit is excessively high.

4.10.2.2. Thermistors (PTC and NTC)

These are thermal detectors consisting of semi-conductor sensor that sharply vary their resistance when reaching a certain temperature.

PTC – Positice Temperature Coefficient.
NTC – Negative Temperature Coefficient.

PTC is a type of thermistors where the resistance **increases** sharply to a pre-defined temperature value, specififed for each individual type. This sharp resistance variation creates an interruption on the PTC current, operating an outlet relay which will switch-off the main circuit. It can be also used for alarm or alarm and tripping system (2 per phase).

NTC operation is opposite of PTC. However, it is not usually used on generators as the control electronic circuits available are normally applied for PTC.
Thermistors have reduced size, are not subject to mechanical wear and present a not faster response if compared to other detectors, although they allow continuous follow of the generator heating process. Thermistors with their corresponding electronic control circuits offer **complete protection** against overheating caused by overload, over or sub-voltages, or switch on-off. Cost is relatively low if compared to cost of Pt-100. However, they require a relay for alarm or operation control.

4.10.2.3. Thermostats

These bimetallic thermal detectors with normally closed silver contacts which operate at certain temperature rise. When the bimetallic operating temperature comes down, it suddenly goes back to iriginal shape allowing closing of contacts.
Thermostats may be used on alarm or tripping systems or both (alarm and tripping) for three phase electric generators, when required by customers. They are series-connected with contactor coil. Depending on the safety level and on customer specification, three thermostats can be applied (one per phase) or six thermostats (groups of two per phase).

For alarm or tripping (two thermostats per phase) **alarm** thermostats must be suitable to operate at the temperature rise foreseen on the generator, while **switching** thermostats must operate at the maximum temperature of the **insulating material.**

STANDARD	Max. ambient temperature ºC ta	Max. temeprature rise allowable for insulation class. t in ºC (Resistance variation method)			
		A	E	B	F
Brazil ABNT NBR - 5117	40	60	75	80	100
International Standard IEC 34 - 1	40	60	75	80	100
Germany VDE 0530 part	40	60	75	80	100
USA NEMA MG 1 and ASA	40	60	-	80	105
Canada CSA C 22.2 Nı 54	40	60	-	80	105
England BS 2613	40	60	75	80	100
Australia BS 2613	40	60	75	80	100
Belgium NBN 7	40	60	75	80	100
Danmark DS 5002	40	60	75	80	100
France NF CS1 -100	40	60	75	80	100
Holland VEMET N 1007	40	-	70	80	100
India IS: 325-1961	40	60	75	80	-
Italy CE 12-3	40	60	70	80	100
Norway NEM AV	40	60	75	80	-
Austria OVE - MIO	40	-	75	80	100
Sweden SEN 22	40	60	70	80	100
Switzerland SEV 3009	40	60	75	80	100

Table 4.10.2 – Maximum Temperature Rise Allowed for Insulation Class.

5. PERFORMANCE CHARACTERISTICS

5.1. RATED POWER

It is the output the generator can provide under its rated characteristics at continuous service duty. The concept of rated power that the generator can provide is closely connected to winding temperature rise (Tab. 5.1.1). It is known that the generator can drive loads much higher than its rated power up to the point it reaches the stability limit.

What in fact happens is that, if this overload is excessively high, that is, if it is required an output above the one the generator was designed for, there will be an overheating and, as a consequence, reduction of generator life time, or even get to sudden burn out.

The generator output is determined based on the consuming source power, or based on the drive motor output:

a) Output determination based on consuming source power.

To be able to determine the machine size, S apparent power must be known.

S = Ul x Il x ˜3.
S = apparent power (VA)
Ul= power supply voltage (V)
Il= power supply current (A)

Based on the catalog, the apparent power is given in kVA, and it applies to power factors ranging from 0.8 and 1.0 (Inductive).
For power factors below 0.8, the output can be reduced as per fig. 0.8, the output power must be reduced as per fig. 5.1.1. This means that the cos φ must be also known.

Therefore, if a generator is connected to the load with different power factors, check first active and reactive power components, and then determine the total apparent power as well as the overall power factor.

$$S = \sqrt{(P1 + P2 + ... + Pn)^2 + (Q1 + Q2 + ... + Qn)^2}$$

Where:
Pn = Active power component of the consuming source (VA).
Qn = Reactive power component of the consuming source (VAr).

$$\text{Cos}\varphi = \frac{\sum P}{S}$$

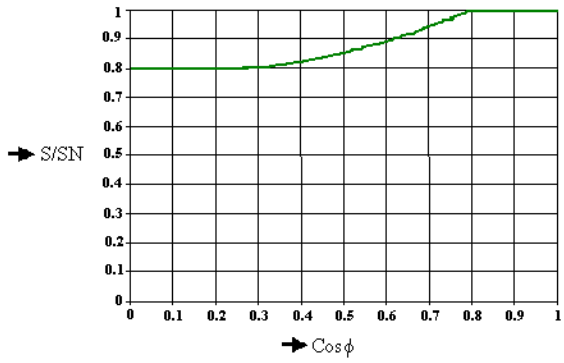

Fig. 5.1.1 – Output power referred to Cosφ.

b) Output power establishment based on drive motor output.

In many cases it is not possible to know the exact consuming source output power.
On this case, the generator output power is determined based on the driving power, and as power factor we can use 0.8.
From the drive motor useful power, we deduct the generator losses to get the active power available on the generator terminals.

$$Pg = \frac{Pn.\eta}{100}(g) \quad (kW)$$

Where:
Pg – generator power (kW)
Pn – drive motor power (kW)
η(g) – generator efficiency (%)

For drive motor output power given in HP, multiplied by 0.736 to get power in kW.

Pn(KW) = Pn(cv) x 0.736

Generator efficiency indicated on the catalogs for power factors ranging from 0.8 and 1.0 must be taken into consideration.

$$S = \frac{Pg}{\text{Cos}\varphi} = \frac{Pn\,x\,\eta}{100\,x\,\text{Cos}\varphi}$$

Examples:
At an industry, a Diesel Set must be installed to provide electricity to its facilities, where there are the following consuming sources:
a) Light 80 kVA Cosφ = 0.7
b) Heating 152 kVACosφ = 1.0
c) 1 three phase WEG motor - IP54 – 40HP - IV
d) 1 three phase WEG motor - IP54 – 60HP - IV Frame 200L
e) 1 three phase WEG motor - IP54 – 75HP - IV

From the WEG three phase motor catalog, we have:

40HP, 30kW motor, Cosφ = 0.85, η = 90.9%, IP/IN = 7.6

60HP, 45 kW motor, Cosφ = 0.88, η = 90.8%, IP/IN = 7,8

75HP, 55 kW motor, Cosφ = 0.90, η = 91.9%, IP/IN = 7.4

For output power determination, continuous service duty was considered. Motor starting influence will be analysed ahead.
For motor active and apparent power calculation, we usually take the useful output power on the shaft; the consumed active power is obtained dividing it by the efficiency.
From the active and reactive power, we get the total generator apparent power as well as the power factor for the 40HP motor. Then we have:

$$P\,(kW) = \frac{Pu\,(kW)\,x\,100}{\eta} = \frac{30}{90,9} = 33,0\,kW$$

$$S\,(kVA) = \frac{P\,(kW)}{\cos\varphi} = \frac{33,0}{0,85} = 38,8\,kVA$$

$$Q = \sqrt{(38,8)^2 - (33,0)^2} = 20,4\,kVAr$$

This way, and for other cases, the following results are obtained from Table 4.1.

The generator apparent power will be:

$$S = \sqrt{(56+152+33,0+49,5+59,8)^2 + (57,1+0+20,4+26,8+28,9)^2}$$

$$S = 375\,kVA$$

LOAD	COS φ	η%	S(kVA)	P(kW)	Q(kVAr)
Light	0.70		80	56	57,1
Heating	1.00			152	-
40HP Motor	0.85	90,9	38.8	33.0	20.4
60HP Motor	0.88	90,8	56.3	49.5	26.8
75HP Motor	0.90	91,9	66.4	59.8	28.9

Table 4.1 – Overall Output Power Table.

The overall power factor will be:

$$\cos\varphi = \frac{\sum P}{S} = \frac{350,3}{375} = 0,934$$

From the WEG generator catalog, we get GTA315SI25 generator, for 220V with output power of 405 kVA. The generator efficiency at full load is indicated on the catalog as 94%.

The generator drive output power will be:

$$P_N = \frac{Pg\,(kVA)\,x\,\cos\varphi}{\eta} = \frac{405\,x\,0,934}{0,940}$$

$$P_N = 402(kW)$$

On the example, generator stationary conditions were analysed. However, before the machine size may be finally defined, motor starting conditions must also be checked.
The procedure is described on 5.3.

5.2. TEMPERATURE RISE – INSULATION CLASS

5.2.1. Winding heating up

The useful output power supplied by the generator is smaller than the drive output power, that is, the generator efficiency is always below 100%. The difference between the two outputs represents the losses which are turned into heat. This heat warms up the winding and it must be obviously removed out to avoid excessive temperature rise.
The same applies to all types of electric machines. On an automobile engine, for example, the heat generated by inner losses must be removed from the frame by the water circulating system (radiator) or by the blowing fan on air cooled engines.
On chapter 4, different cooling types are described.

5.2.2. Electric rotating machine life time

If we do not consider parts the get worn due to normal operation such as brushes, bearings, an electric machine life time is usually limited by the insulation system.
This material is affected by several factors including moisture, vibrations, corrosive environments and others. Among all these factors, the most relevant is the insulating material operating temperature.
An increase of 8 to 10 degrees on the insulation temperature will reduce its life time by half.
When we refer to machine life time reduction, we do not refer to excessive temperatures that cause complete sudden burn out. In terms of operating temperature, insulation life time is much lower that that causing complete burn out. In fact, it refers to gradual insulating agging which becomes dry and, as a consequence, losing its insulating properties up to the point is does not withstands the applied voltage and then causes short-circuit.

Experiences show that an insulation systerm has unlimited life time as long as the temperature is kept below certain limit. If it exceeds this level, insulaltion life time is reduced as the operating temperature increases. As described above, this limit of temperature is much lower than that causing the burn out and it depends on the type of materials used.
Such temperature limitation refers to the winding hottest spot and not necessarly to the whole winding. Any little defective spot inside the winding is enough to affect the whole winding system.

5.2.3. Insulation class

Class Definition:
As described above, temperature limiti depends on the type of materials used. Based on Standards, insulation materials and insulation systems (each one consisting of several materials) are grouped in Insulation Classes. Every one is defined by its corresponding temperature limit, that is, by the highest temperature the material can withstand continuously without affecting its life time.
Insulation classes applied on electric machines and the corresponding temperature limits as per NBR 7094 Standard are the following:
Class A (105ºC) - Class E (120ºC) - Class B (130ºC) - Class F (155ºC) - Class H (180ºC).
Classes B and F are usually applied to standard motors, while for generators, F and H are commonly applied.

5.2.4. Winding temperature measurement

It is quite difficult to measure winding temperature with the application of thermometers or thermopars as the temperature varies from one spot to other and we never know if the measuring spot is close to the hottest spot.
The best and most reliable method to measure it is the ohm resistance variation method which takes the lead properties of varying their resistance, based on a well known procedure.
The temperature rise by resistance method is calculated with the application of the following formula for copper leads:

$$\Delta t = t_2 - t_a = \frac{R_2 - R_1}{R_1}(234{,}5 + t_1) + t_1 - t_a$$

where:
Δt = Temperature rise;

t_1 = Winding temperature before test, basically equal to cooling means, measured with thermometer;

t_2 = Winding temperature after test;

t_a = Cooling means temperature after test:

R_1 = Winding resistance before test;

R_2 = Winding resistance after test.

234.5 = Cte material (copper).

5.2.5. Aplication to electric machines

The winding hottest spot temperature must be kept below the class limit. For total temperature consider the ambient temperature already including temperature rise (Δt) plus the difference between winding average temperature and the hottest spot temperature.
Electric machine standards define the maximum temperature rise (Δt), in such a way that the hottest spot temperature is limited as per following considerations:

a) Based on Standards, maximum ambient temperature is 40ºC. Above that, operating conditions are considered special

b) The difference between average temperature and the hottest point does not vary too much from one machine to another and its defined

value, based on pratical experiences, is 5ºC, for classes A and E; 10ºC for class B; and 15ºC for classes F and H.
Electric machine standards define a maximum limit for ambient temperature and also specify a maximum ambient temperature for each insulation class. So it is indirectly limited to the hottest spot temperature.
Numerical values and allowable temperature of the hottest spot is given on table 5.1.1.

* Naval application generators must strictly follow all certifying entities requirements.

Classe de Isolamento		A	E	B	F	H
Temperatura ambiente	ºC	40	40	40	40	40
∆t= elevaçao de temperatura (método de resistência)	ºC	60	75	80	100	125
Diferença entre o ponto mais quente e a temperatura média	ºC	5	5	10	15	15
Total: temperatura do ponto mais quente	ºC	105	120	130	155	180

Table 5.1.1 – Temperature composition referred to insulation class.

5.3. VOLTAGE DROP

5.3.1. Voltage drop calculation

When applying a load to the generator, there will be a sudden voltage drop which depends on the generator reactance, current, cos ø, load, and type of regulation. The main voltage drop and recovery occur on induction motor starting.
On induction motor starting, power factor is 0.3.
To make the calculation easier, let's consider cosφ equal to zero, as well as to disregard power supply cable impedance and generator inside resistance.
Considering the mentioned simplifying factors (fig. 5.3.1).

$$\Delta U = \frac{XA}{XA + Xm}$$

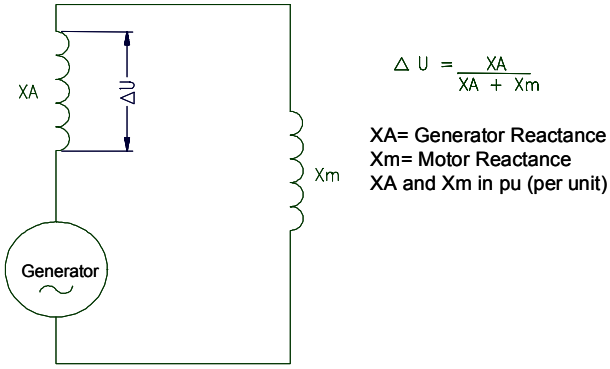

Fig. 5.3.1 – Synchronous Generator Impedance (simplified system).

Due to load variation, generator reactance varies with the time (xd", xd' and xd, as per own time constants), as shwon on item 2.5.
Fig. 5.3.2 shows voltage variation referred to time. The curves shown depend on the generator parameters and on excitation response time and on the regulation system.

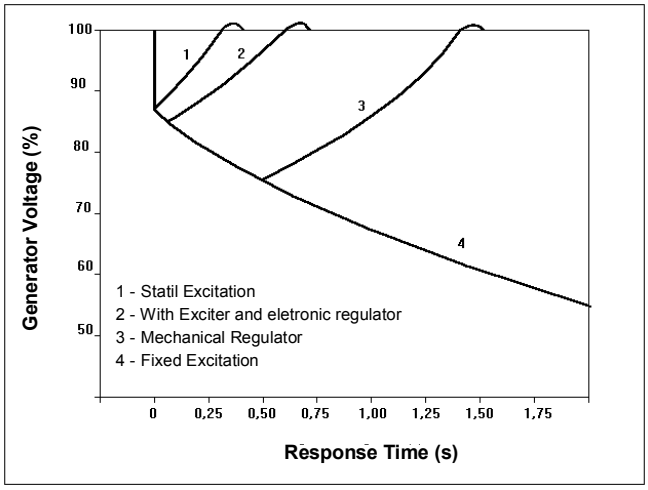

Fig. 5.3.2 – Voltage Variation Referred to Time.

Voltage drop calculation becomes complex if we take into consideration time reactance variation. We can get to certain figures close to reality, if we consider for voltage drop the **transitory reactance (xd')**, for machine fitted with exciter and electronic regulator, and **subtransitory reactance (xd")** for machines fitted with static excitation (with brushes).
The voltage drop equation is then:

$$\Delta U\% = \frac{X^* d}{1 + X^* d} . 100$$

or in general terms for any generator Ip/In value, the ratio applied is then

$$\Delta U\% = \frac{[\, X^* d \,.(Ip/In)]}{1 + [\, X^* d \,.(Ip/In)]} . 100$$

where:
X* d = xd' on machines fitted with exciter and electronic regulator, in pu (brushless generators)

X* d = xd" on machines fitted with static exciter, in pu (Gerators with brushes)

Ip = motor starting current

In = generator rated current

Table 5.3.1 shows ΔU value referred to X^* d and Ip/In for cosφ equal to zero.

5.3.2. Power factor influence

If voltage drop needs to be calculated for cos ø different than zero, graphic of fig. 5.3.3 must be then used.
On this graphic, we may find the "x" correction value and it must be multiplied by ΔU to cosφ = 0.
ΔU(cosφ any) = X.ΔU(cosφ = 0).
The voltage drop, as we can see on the curve, will reduce as the power factor increases.

5.3.3. Initial load influence

The generator initial loads may be groupped in three types:

- Constant impedance;
- Constant kVA;
- Constant current.

Generator current will reduce proportinally to generator voltage, when this is under constant impedance load. As a cosequence, this effect will reduce the voltage drop. This may be disregarded for calculation purposes.

Example of constant impedance load:

- Lights;
- Heaters;
- Resistors.

When there is a constant kVA load, on voltage drop, we will have an increase of current, causing consequent increase in voltage drop.
An example of this type of load are the induction motors. Current variation on induction motors, in reference to voltage drop, is shown in fig 5.3.4
Such current variation must be added to an induction motor starting current. Although power factors are different, they are considered, within a pessimism view, the same.
When combining constant KVA and constant impedance loads, we will have constant current loads, as the effect is opposite with possibility to become void. On this case, the voltage drop would not cause current variations and, as a cosequence, there would not be voltage drop.
These are considered the most common loads. For voltage drop calculation, we may use table 5.3.1.

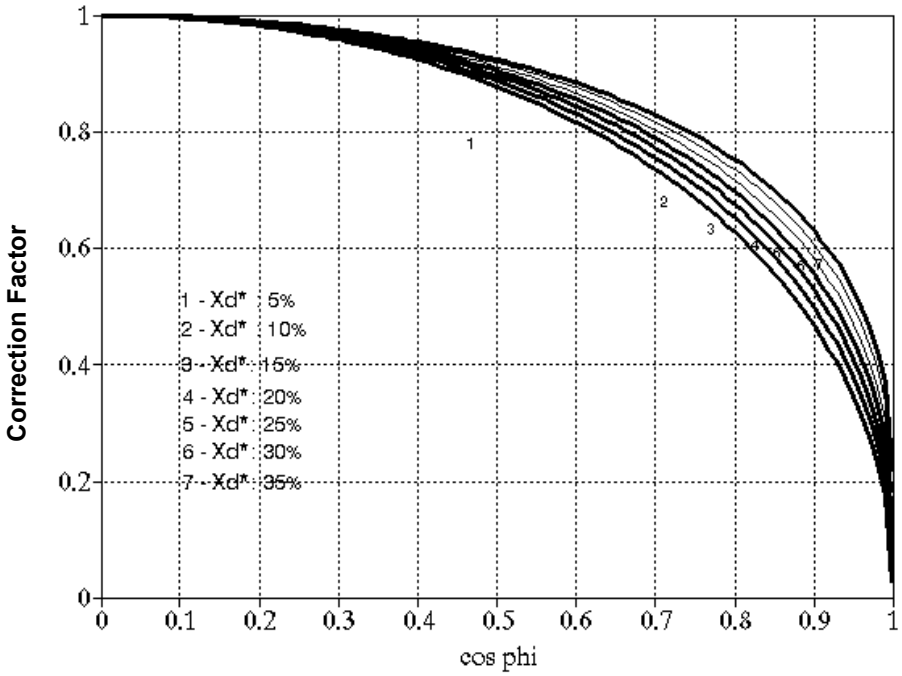

Fig 5.3.3 – Correction of ΔU referred to Cosφ.

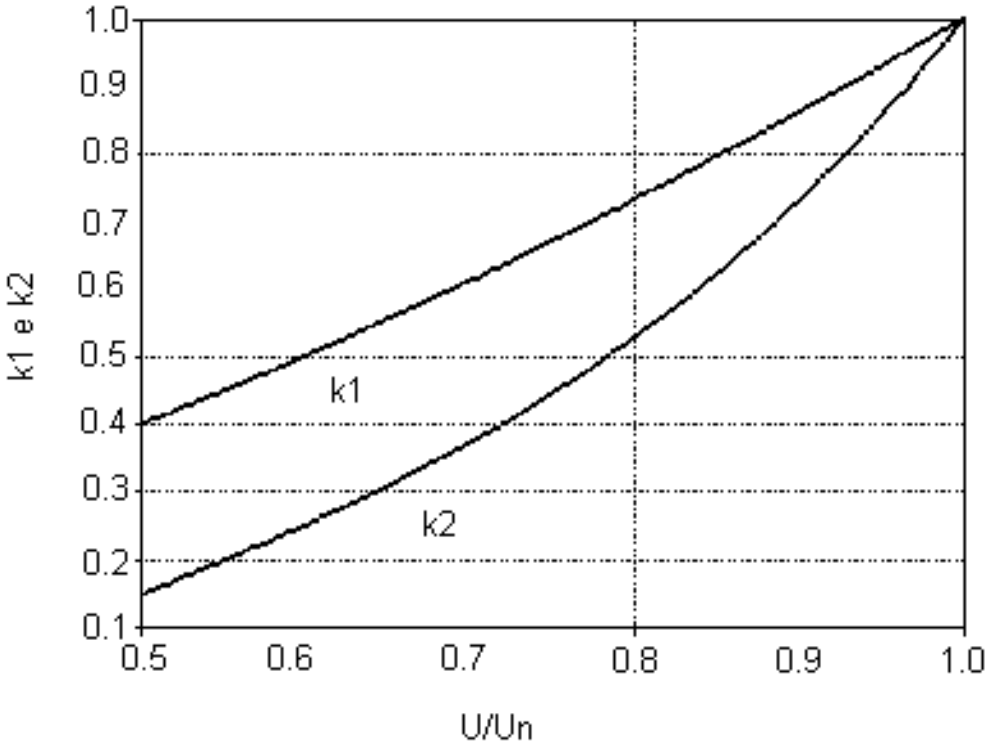

Fig 5.3.5 – Current (K1) and Torque (K2) Reduction Factors Referred to Voltage.

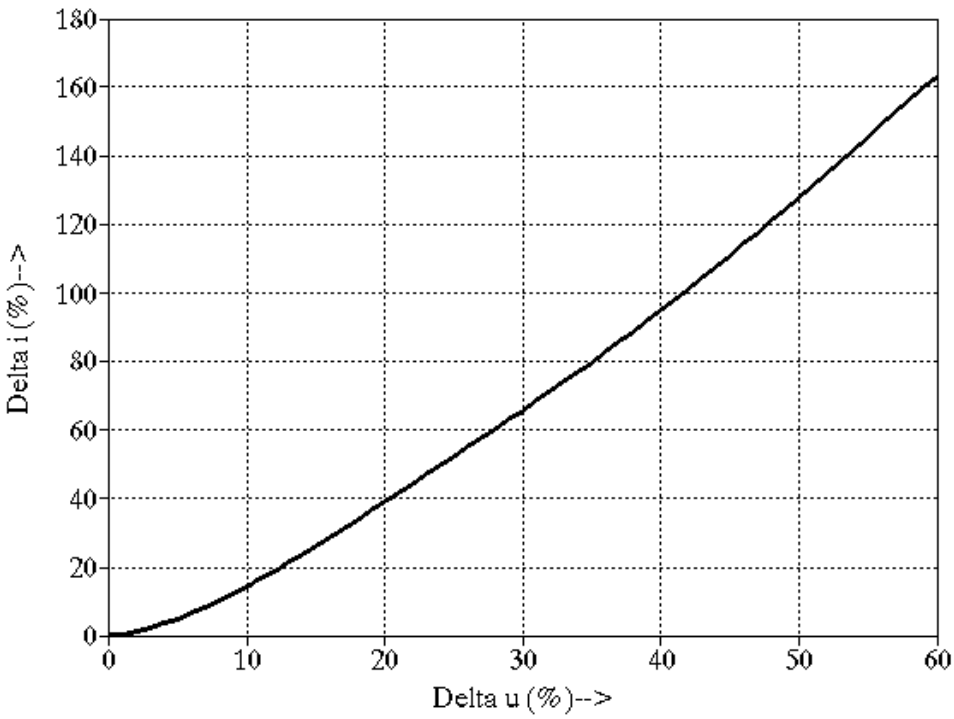

Fig 5.3.4 - Δi on Induction Motors.

5.3.4. Motor Starting Limitation

We consider as motor starting current limit the value equal 2 x the generator IN. Above this value, the residual voltage drop becomes significant and the time period it remians there (thermal limit) is short, as shown in graphic fig. 5.4.1, which can be shorter than the motor starting time period. On the specific case of 2x IN the overload time, as shown on the graphic, is 20s30s.

To reduce motor starting current, star-delta starting or compensating switch are usually applied.
The starting current variation referred to voltage (K1) is shown in the graphic of fig. 5.3.5. This current reduction must be considered on the voltage drop calculation. Another topic to be considered is the drive machine output power, which is usually designed with cos ø = 0.8 (useful power (kW) = 0.8 x apparent power (kVA). The voltage drop caused by motor starting can make the motor not suitable to drive the load. Graphic of fig. 5.3.5 shows torque reduction (K2) with voltage drop. Driven load must be analysed so as to get minimum torque value and consequent voltage drop limitation.

For parallel-operation generators, the total reactance must be calculated applying the following expression:

$$\frac{I_T}{xd^*} = I_G \frac{1}{xd^*} + I_G \frac{2}{xd^*} + \ldots + \frac{I_{Gn}}{xd^*}$$

where:

xd^* = total reactance (xd' or xd", case by case).

xd^* ... n = reatance of each generator connected in parallel.

I_T = Total rated current of all parallel-connected generators.

$I_{G1...n}$ = Rated current of each parallel-connected generator.

NOTE: If two identical parallel–connected generators are used, the total reactance is equal to individual generator reactance.

VOLTAGE DROP ON SYNCHRONOUS GENERATORS

VOLTAGE DROP (for Cos. φ = 0.0)															
x*(pu)	IP/IN														
	0.200	0.400	0.600	0.800	1.000	1.200	1.400	1.600	1.800	2.000	2.200	2.400	2.600	2.800	3.000
0.050	0.010	0.020	0.029	0.038	0.048	0.057	0.065	0.074	0.083	0.091	0.099	0.107	0.115	0.123	0.130
0.060	0.012	0.023	0.035	0.046	0.057	0.067	0.077	0.088	0.097	0.107	0.117	0.126	0.135	0.144	0.153
0.070	0.014	0.027	0.040	0.053	0.065	0.077	0.089	0.101	0.112	0.123	0.133	0.144	0.154	0.164	0.174
0.080	0.016	0.031	0.046	0.060	0.074	0.088	0.101	0.113	0.126	0.138	0.150	0.161	0.172	0.183	0.194
0.090	0.018	0.035	0.051	0.067	0.083	0.097	0.112	0.126	0.139	0.153	0.165	0.178	0.190	0.201	0.213
0.100	0.020	0.038	0.057	0.074	0.091	0.107	0.123	0.138	0.153	0.167	0.180	0.194	0.206	0.219	0.231
0.110	0.022	0.042	0.062	0.081	0.099	0.117	0.133	0.150	0.165	0.180	0.195	0.209	0.222	0.235	0.248
0.120	0.023	0.046	0.067	0.088	0.107	0.126	0.144	0.161	0.178	0.194	0.209	0.224	0.238	0.251	0.265
0.130	0.025	0.049	0.072	0.094	0.115	0.135	0.154	0.172	0.190	0.206	0.222	0.238	0.253	0.267	0.281
0.140	0.027	0.053	0.077	0.101	0.123	0.144	0.164	0.183	0.201	0.219	0.235	0.251	0.267	0.282	0.296
0.150	0.029	0.057	0.083	0.107	0.130	0.153	0.174	0.194	0.213	0.231	0.248	0.265	0.281	0.296	0.310
0.160	0.031	0.060	0.088	0.113	0.138	0.161	0.183	0.204	0.224	0.242	0.260	0.277	0.294	0.309	0.324
0.170	0.033	0.064	0.093	0.120	0.145	0.169	0.192	0.214	0.234	0.254	0.272	0.290	0.307	0.322	0.338
0.180	0.035	0.067	0.097	0.126	0.153	0.178	0.201	0.224	0.245	0.265	0.284	0.302	0.319	0.335	0.351
0.190	0.037	0.071	0.102	0.132	0.160	0.186	0.210	0.233	0.255	0.275	0.295	0.313	0.331	0.347	0.363
0.200	0.038	0.074	0.107	0.138	0.167	0.194	0.219	0.242	0.265	0.286	0.306	0.324	0.342	0.359	0.375
0.210	0.040	0.077	0.112	0.144	0.174	0.201	0.227	0.251	0.274	0.296	0.316	0.335	0.353	0.370	0.387
0.220	0.042	0.081	0.117	0.150	0.180	0.209	0.235	0.260	0.284	0.306	0.326	0.346	0.364	0.381	0.398
0.230	0.044	0.084	0.121	0.155	0.187	0.216	0.244	0.269	0.293	0.315	0.336	0.356	0.374	0.392	0.408
0.240	0.046	0.088	0.126	0.161	0.194	0.224	0.251	0.277	0.302	0.324	0.346	0.365	0.384	0.402	0.419
0.250	0.048	0.091	0.130	0.167	0.200	0.231	0.259	0.286	0.310	0.333	0.355	0.375	0.394	0.412	0.429
0.260	0.049	0.094	0.135	0.172	0.206	0.238	0.267	0.294	0.319	0.342	0.364	0.384	0.403	0.421	0.438
0.270	0.051	0.097	0.139	0.178	0.213	0.245	0.274	0.302	0.327	0.351	0.373	0.393	0.412	0.431	0.448
0.280	0.053	0.101	0.144	0.183	0.219	0.251	0.282	0.309	0.335	0.359	0.381	0.402	0.421	0.439	0.457
0.290	0.055	0.104	0.148	0.188	0.225	0.258	0.289	0.317	0.343	0.367	0.389	0.410	0.430	0.448	0.465
0.300	0.057	0.107	0.153	0.194	0.231	0.265	0.296	0.324	0.351	0.375	0.398	0.419	0.438	0.457	0.474
0.310	0.058	0.110	0.157	0.199	0.237	0.271	0.303	0.332	0.358	0.383	0.405	0.427	0.446	0.465	0.482
0.320	0.060	0.113	0.161	0.204	0.242	0.277	0.309	0.339	0.365	0.390	0.413	0.434	0.454	0.473	0.490
0.330	0.062	0.117	0.165	0.209	0.248	0.284	0.316	0.346	0.373	0.398	0.421	0.442	0.462	0.480	0.497
0.340	0.064	0.120	0.169	0.214	0.254	0.290	0.322	0.352	0.380	0.405	0.428	0.449	0.469	0.488	0.505
0.350	0.065	0.123	0.174	0.219	0.259	0.296	0.329	0.359	0.387	0.412	0.435	0.457	0.476	0.495	0.512
0.360	0.067	0.126	0.178	0.224	0.265	0.302	0.335	0.365	0.393	0.419	0.442	0.464	0.483	0.502	0.519
0.370	0.069	0.129	0.182	0.228	0.270	0.307	0.341	0.372	0.400	0.425	0.449	0.470	0.490	0.509	0.526
0.380	0.071	0.132	0.186	0.233	0.275	0.313	0.347	0.378	0.406	0.432	0.455	0.477	0.497	0.516	0.533
0.390	0.072	0.135	0.190	0.238	0.281	0.319	0.353	0.384	0.412	0.438	0.462	0.483	0.503	0.522	0.539
0.400	0.074	0.138	0.194	0.242	0.286	0.324	0.359	0.390	0.419	0.444	0.468	0.490	0.510	0.528	0.545

Table 5.3.1 – Voltage Drop on Synchronous Generators.

Where:
IP = Motor starting current.
IN = Generator rated current.

EXAMPLE OF VOLTAGE DROP CALCULATION ON GENERATORS INVOLVING SEVERAL MOTORS

Required information:

a) Generator GTA250MI33, 230 kVA, 440V Xd'= 16.3% (Xd'= 0.163pu).

b) Induction motors.

b.1) 100 HP - 4 poles - 440 V - IN = 120 A IP = 1056 A.

b.2) 75 cv - 4 poles - 440 V - IN = 87,5 A IP = 647,5 A.

b.3) 25 HP - 4 poles - 440 V - IN = 31,5 A IP = 271 A.

c) Generator load receiving conditions.

c.1) First it starts a 100HP, using soft starter with TAP of 65%.

c.2) Other condition would be to start (with TAP of 65%) of a 75HP motor, considering that the 100 and 25HP motors are in operation.

SOLUTION:

Generator current calculation:

$$Ig = \frac{230000}{\sqrt{3}\,.\,440} = 302\ A$$

I - Voltage drop calculation caused by the starting of a 100HP motor (with soft starter on Tap 65%), considering 25 and 75HP motors switched-off:

IN = 120A
IP = 1056 A

NOTE: Pretend a voltage drop of 15% on the generator (initial supposition).

Using a soft starter with TAP OP 65 % and voltage drop on the generator of 15% (0.85.0.65 = 0.55) we get, of fig. 5.3.5:

K1 = 0.45

$$IP_{motor\ 65\%} = IP_{100\%}\,.\,K1$$

$$IP_{motor\ 65\%} = 1056\,.\,0{,}45 = 475\ A$$

However, when referring to soft starter, we have to refer the motor starting current (secondary of the soft starter) to the generator (primary of the soft starter).

$$\frac{IP_{prim}}{I_{sec}} = \frac{IP_{motor\ ref.}}{IP_{motor\ 65\%}} = 0{,}65$$

$$IP_{motor\ ref.} = IP_{motor\ 65\%}\,.\,0{,}65$$

$$IP_{motor\ ref.} = 475\,.\,0{,}65 = 309\ A$$

$$\frac{IP_{motor\ ref}}{I_g} = \frac{309}{302} = 1{,}023$$

We will have a voltage drop of:

$$\Delta V = \frac{[X'd\,.\,IP/IN]}{1+[X'd\,.\,IP/IN]}\,.\,100 =$$

$$= \frac{[0{,}163\,.\,1{,}046]}{1+[0{,}163\,.\,1{,}046]}\,.\,100 = 14{,}57\%$$

Recalculating (1º itemization) for generator voltage drop of 14,29%, we have:

$$0{,}65\,.\,(1-0{,}1429) = 0{,}56 \rightarrow K1 = 0{,}46$$

$$IP_{motor\ 65\%} = IP_{100\%}\,.\,K1$$

$$IP_{motor\ 65\%} = 1056\,.\,0{,}46 = 486A$$

$$IP_{motor\ ref.} = IP_{motor\ 65\%}\,.\,0{,}65$$

$$IP_{motor\ ref.} = 486\,.\,0{,}65 = 316A$$

$$\frac{IP_{motor\ ref.}}{Ig} = \frac{316}{302} = 1{,}046$$

We will have a voltage drop of:

$$\Delta V = \frac{X'd\,.\,IP/IN}{1+[X'd\,.\,IP/IN]}\,.\,100 =$$

$$= \frac{[0{,}163 \cdot 1{,}046]}{1+[0{,}163 \cdot 1{,}046]} \cdot 100 = 14{,}57\%$$

II - Voltage drop calculation caused by the starting of a 75HP motor (with soft starter on Tap of 65%), considering 25 and 75HP motors are already in operation:

II.1 - Individual contribution of the 75HP motor - IN = 87.5 A IP = 647.5 A.

Supposing an initial voltage drop of 15% and using soft starter with TAP 65%:

$$IP_{motor\ 65\%ref.} = 647{,}5\ .\ 0{,}45\ .\ 0{,}65$$

$$IP_{motor\ 65\%ref.} = 189A$$

$$\frac{IP_{motor\ 65\%\ ref.}}{Ig} = \frac{189}{302} = 0{,}627$$

The resulting voltage drop, only considering the starting of the 75HP motor, will be:

$$\Delta V = \frac{0{,}712\ .\ 0{,}163}{1 + [0{,}712\ .\ 0{,}163]}\ .\ 100\%$$

$$\Delta V = 11{,}0\%$$

$$\Delta V = 9{,}27\%$$

II.2 - Contribution of the 100HP and 25 HP motors when starting a 75HP motor:

Note: The calculation process is iterative and follows the calculation procedures described below:

II.2.1 - Supposed drop value = 15%. From graphic of fig. 5.3.4, we get current variation of the motors under load. For the case in question, we have Δi = 0,26.

Then, the motor current adders are:

10HP motor (IN = 120 A - 440 V)

Addition = Δi . 120 = 0,26 .120

Addition = 31.2 A

$$\Delta i\ (M100) = \frac{Addition}{Ig} = \frac{31{,}2}{302}$$

$$\Delta i(M100) = 0{,}103$$

25HP motor (IN = 31.5 A - 440 V)

Addition = 0.26 . 31,5
Then ΔV stipulated ~ ΔV calculated. Calculation can be concluded.

Addition = 8.2 A

$$\Delta i\ (M25) = \frac{8{,}2}{302} = 0{,}027$$

Voltage drop calculation

$$\frac{IP}{IN} = \frac{IP}{Ig}(M75) + \Delta i(M100) + \Delta i(M25)$$

$$\frac{IP}{IN} = 0{,}627 + 0{,}103 + 0{,}027$$

$$\frac{IP}{IN} = 0{,}757$$

$$\Delta V = \frac{0{,}757\ .\ 0{,}163}{1 + [0{,}757\ .\ 0{,}163]}\ .\ 100$$

As we supposed ΔV = 15% and it resulted on a drop of 11%, the calculation will be remade:

II.2.2 – Supposing a drop of 11%, of fig. 5.3.4, Δi = 17%.

100HP motor -> Δi(M100) = 0.067

25HP motor -> Δi(M25) = 0.018

$$\frac{IP}{IN} = \frac{IP}{Ig}(M75) + \Delta i(M100) + \Delta i(M25)$$

$$\frac{IP}{IN} = 0{,}627 + 0{,}067 + 0{,}018$$

$$\frac{IP}{IN} = 0{,}712$$

$$\Delta V = \frac{0{,}163\ .\ 0{,}627}{1 + [0{,}163\ .\ 0{,}627]}\ .\ 100\%$$

$$\Delta V = 10{,}4\%$$

CONCLUSION: We can note that the contribution from the motors already in operation did not cause significant increase, on this case, on the general voltage drop.

5.4. OVERLOAD

As per VDE 530 or ABNT Standards, synchronous generators should supply 1.5 times their rated current for 15 seconds. On this case, the voltage must be maintained close to the rated voltage. This is done through regulation.
For use on board of ships, generators must supply 1.5 times the rated current for 2 minutes.
For TELEBRÁS generator line, the allowable overload is 1.1 times the rated current for 1 hour.
The momentary overload referred to current, for normal operation machines (catalog machines), is shown in fig.5.4.1.

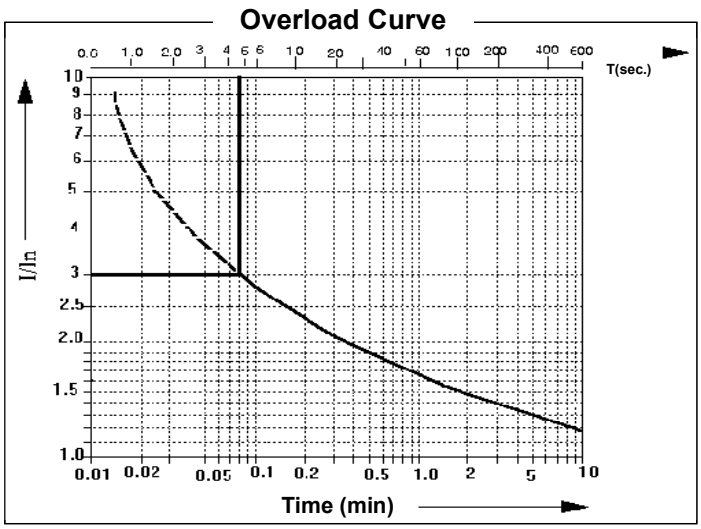

Fig 5.4.1 - Momentary overload curve referred to current (for normal machines).

5.5. OVERSPEED

As per NBR 5052 Standard, synchronous machines are suitable to withstand 1.2 times the rated speed for 2 minutes. Under this condition, the machine may or may not be excited.

5.6. SHORT-CIRCUIT CURRENT

Every time two points with different potentials and low resistance are connected, we will then have a short-circuit. As a general rule, this accident usually causes damage to the electrical circuit.
Short-circuit currents on electric systems are calculated considering the reactance's with their potential values.

The maximum three phase short-circuit current can be calculated with the following formula:

$$Icc\ M`X = \frac{2{,}55\ x\ If}{x''d}\ x\ 100 \quad (A)$$

xd'' in %

And the effective current of one phase will be:

$$Icceff = \frac{If}{x''d}\ x\ 100 \quad (A)$$

The permanent short-circuit current remains twice above the generator rated current, with adjustment made at the factory. As describe on chapter 5.4, the generator must be switched-off after 5 mnutes, the latest.

5.7. REACTANCE CONVERSION

It is usual to express the reactance of a machine as reference value per unit (pu).

Rated reference is taken as reference magnitude.

$$Xn = \frac{Un}{\sqrt{3}\ x\ In} \qquad (\Omega)$$

$$Xn = 1{,}0 \quad (pu)$$

If the same machine is operated for more than one speed, different frequence than 60Hz, other voltage

or other output power, the machine reactance varies, as per expression below:

$$X2 = X1 .(f2/f1) . Sn2/Sn1 . (Un1/Un2)^2$$

Where:

X2 = reactance on new base
X1 = reactance on old base
f2 = frequency on new base
f1 = frequency on old base
Sn2= output on new base
Sn1= output on old base
Un1= voltage on old base
Un2= voltage on new base

NOTE: Catalog generators can only vary the speed when changing from 50Hz to 60Hz. Voltage variation will only be possible for lower value or proportinally to the frequency. For downwards voltage variation cases, it must be reduced portionally to the output.

Example: On a 850 kVA - 380 V - 50Hz generator.

A generator without variations, must operate at 60Hz and supply 1000kVA and 440V.

For 50 Hz and 850 kVA, the transitory reactance taken from claculaltion was xd' = 21%.

What magnitude will the transitory reactance have for the new operating condition?

Solution:

$$Xd' 60Hz = Xd' 50Hz . 60/50 . 1000/850 .(380/440)$$

$$Xd' 60Hz = 21 \times 1.053 = 22\% \tilde{} 22\%$$

5.8. GENERATOR PROTECTION

This item will describe generator protection, however not related to its design.
Referring to certain abnormal generator operating conditions, we can have terminal values excessively high. This may occur, for example, when there is a sudden increase on the primary machine speed, or when terminal (regulator) voltage reference is interrupted. On these cases, the generator voltage must be checked so as to de-excite the machine. Generators fitted with voltage regulation independent from frequency regulation, and driven with speeds below 90% of its rated speed, for a long period of time, must be switched-off.
It the generator is connected to a power supply, and a short-circuit occurs, there will then be a critical situation at the moment the short-circuit is terminated and the voltage recovered. The output supplied by the generator will probably not be the same as before the short-circuit. This way, through drive torque, we will have an acceleration or a delay. Under these conditions, voltages will no longer be phased. Based on the short-circuit duration and due to displacement angle, strong reajust process will occur, which can be compared to loss of synchronism. As a consequence, damages may be caused to couplings, bases as well as on the excitation circuit. This way, if there is a short-circuit on the power supply and the voltage drops to 50% of the rated voltage, generator must be immediately switched-off from the power supply.

5.9. SERVICE DUTY

It is the load regularity level which the generator is submitted to. The generator is designed for continuous duty, that is, constant load for unlimited period of time and equal to machine rated output power.
The machine service duty must be given by the purchaser trying to be as precise as possible. On those cases where load does not vary or when it varies when known beforehand, service duty can be indicated numerically or through graphics that represent the variation referred to the variable magnitude time. When the real sequence of the time values is not defined, a sequence must be indicated which can not be less severe than the real one.

5.9.1. Standisdized Service Duties

The service duties described ahead were defined based on generator applications (for example: S1, S2 and S3):

a) <u>S1 Service Duty</u>

Operation at constant load for enough period of time to achieve thermal balance (Fig. 5.9.1).

t_N = Constant load operation.

$\theta_{máx}$ = Maximum cycle temperature.

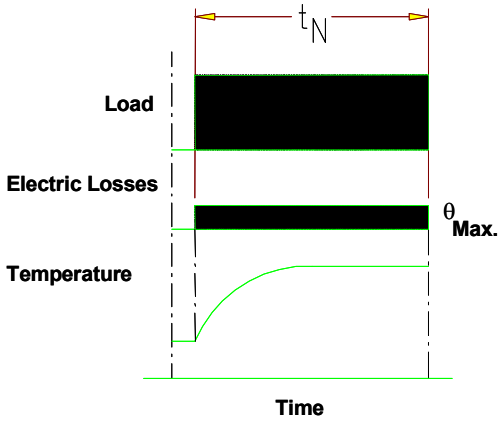

Fig. 5.9.1 – S1 Service duty.

b) Limited Time Service Duty (S2)

Constant load operation for a certain period of time, shorter than the required to achieve thermal balance; followed by a rest period long enough to balance the temperature with the cooling means (Fig 5.9.2).

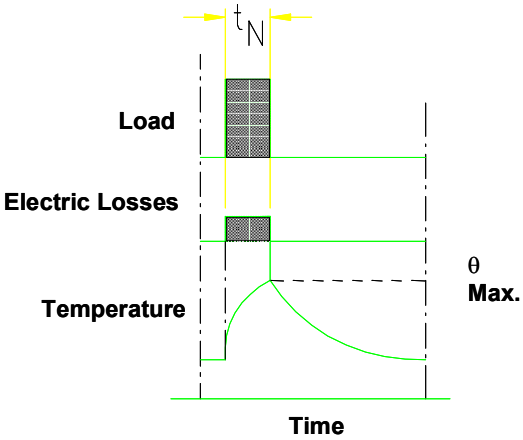

Fig 5.9.2 - S2 Service Duty.

t_N = Constant load operation
$\theta_{máx}$ = Maximum cycle temperature

c) Periodical Intermittent Service Duty (S3)

Sequence of identical cycles, every one including a constant load operating cycle and rest period for a duty cycle, on which the starting current does not affect the temperature rise significantly (Fig. 5.9.3)

t_N = Constant load operation

t_R = Rest

$\theta_{máx}$ = Maximum cycle temperature

Cycle time (ED)

$$ED = \frac{t_N}{t_N + t_R} . 100\%$$

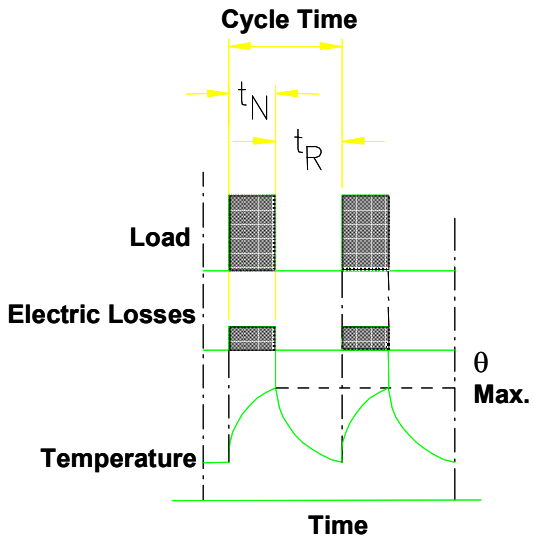

Fig. 5.9.3 - S3 Service Duty.

5.10. LOAD DIAGRAM

For safe generator operation, it is assential to know the machine operating limits. These limits may be determined by the drive machine output power, operation stability, field excitation and generator thermal limit. These conditions are all analysed through the load diagram of fig. 5.10.2.
This diagram allows an analysis of the area where the generator operates, and then evaluate the machine operating conditions.
How the diagram is designed will not be analysed here. In fact, based on the diagrams obtained, we will make comment on the graphic limits.
The drive machine limit is defined by the useful output power supplied by the generator, and determined by the machine limit (FD line on the graphic).
Stability limit is defined by BC curve, where the maximum output is defined (maximum load angle δ of fig. 5.10.1).
With excitation reduction (capacitive load described on item 2.3.c).

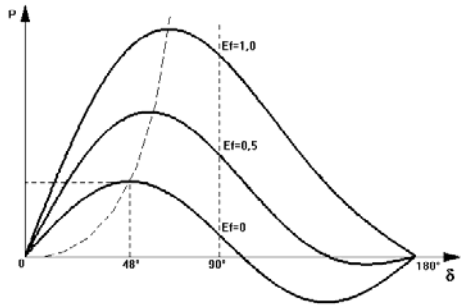

Fig. 5.10.1 – Maximum load angle δ.

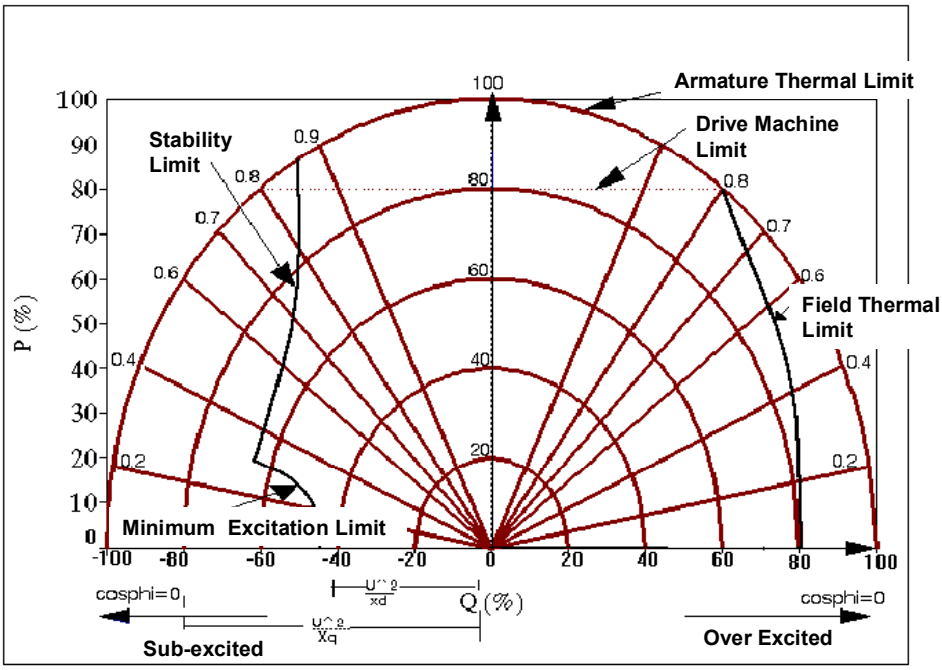

Fig. 5.10.2 – Synchronous Machine Load Diagram (Damage Curve).

When reaching zero excitation, we will only have the output that depends on the reluctance torque, and on the varion, it is done with double of the load angle δ (as described on item. 2.6.). For zero excitation, the load angle would be 45º for maximum output power. This limit may be seen in the AB curve.

The armature thermal limit is determined by stator losses and machine cooling capacity. The resulting losses are joules losses, caused by armature current (CD curve). Rotor thermal limit is defined by excitation current and occurs at the inductive load area, where high excitations are required (DE curve).

The generator must be capable to operate with a variation of + or - 10% of the voltage.

The voltage reduction will reduce the capacity to supply capacity reactive power, heat the stator and increase the load angle. On the other hand, voltage increase will cause more stability (capacitive load), lower output angle and higher excitation winding heating.

For safe generator operation, all operating points must be included in the load diagram, following the maximum active and reactive power. Based on the graphic, the highest limitation is noticed on the capacitive loads. However, these loads do not correspond to the operation condition.

Low voltage generators are mainly used on industrial equipment connection or on specific applications such as telecommunication, where we normally have inductive and not liner loads.

On these conditions, the generator will be under high excitation.

The capacitive load limit is required for large size generators connected to long open power supply lines, as these become capacitive loads.

5.11. GENERATOR PARALLEL OPERATION

During a generator operating cycle, operation is required either at its rated output power or below the rated values.
When generator is not much required, its machine and the drive machine efficiency are reduced. For this reason, and due to energy safety supplying reason, generator parallel operation would be recommended. So for parallel operation, the following points must be followed:

1. Generator voltage must correspond to the power suply voltage;

2. The generator voltage phase angle must correspond to the power supply bar voltage to which is connected;

3. System frequencies must be the same;

4. Phase sequence order to the connecting points must be the same.

On parallel-connected generators, the active power distribution depends on the drive torque, while the reactive current depends on each generator excitation.
Driving machines tend to reduce speed as the active power increases. This is required to provide a stable active power distribution.
On the same way, to get a stable reactives distribution, generator excitation must be reduced, with reactives increase. This is shown in fig. 5.11.1, where the voltage characteristic curve is decreasing.

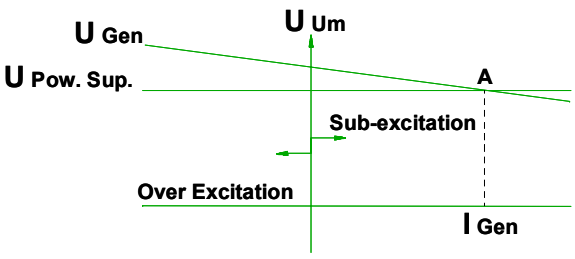

Fig. 5.11.1 – Stable reactive distribution.

To get the excitation reduced, a current signal with reactive part must be sent to the regulator. This is done applying a static transformer Bf1 (with ratio IN:1) ans static reactance Br2 (2.3Ω) Fig. 5.11.3. With the voltage obtained between phases U and W and with the static transformer that is in phase V, a proportional value of the generated voltage is then sent to the regulator, which is the geomatric sum of a proportional voltage to U-W voltage and the static resistance voltage (Fig 5.11.2).

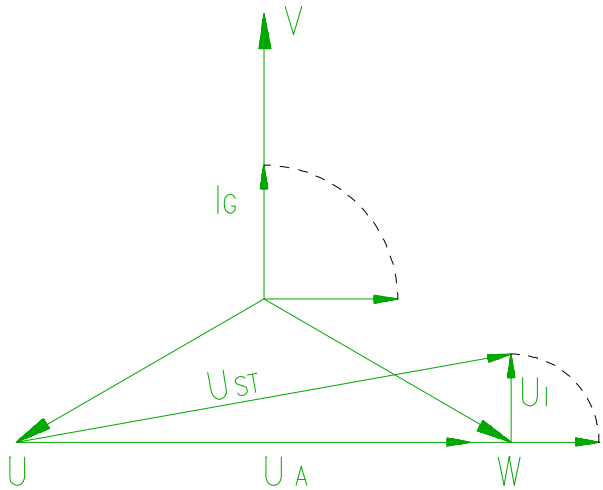

Fig 5.11.2 – Generated voltage geometric analysis.

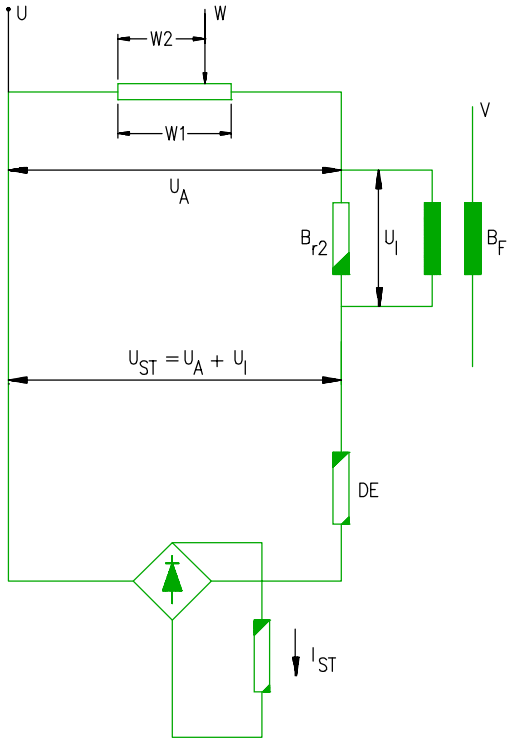

Fig. 5.11.3 – Generator Parallel Operation

As we can see in fig. 5.11.2 , the geometric sum of the two voltages is at maximum when the generator supplies reactive power. With purely resistive load, the geometric sum almost have no deviation from the proportional voltage between U and W. So, an increase of reactive power will cause current generator voltage increase. As a consequence, we will have excitation current reduction causing terminal voltage stability.

Usually, the reactive current static influence is selected in such a way that for reactive current

equal to generator rated current corresponds to voltage drop of approximately 5%.

ACTIVE POWER DIVISION

For two parallel-operation generators, if loadd is increased, their speeds are reduced, which is noticed by the primary machine speed control system. The voltage regulator will recover the normal speed. The division of load between two generators is determined by primary machine speed regulator characteristics.

If a system is fitted with speed characteristics type "a" (fig.5.11.4) and the other is type "b", they will divide the loads within a proportion Pa and Pb when they are operating at S speed. The load control in an unit is obtained ajusting the speed regulator characteristics up and down.

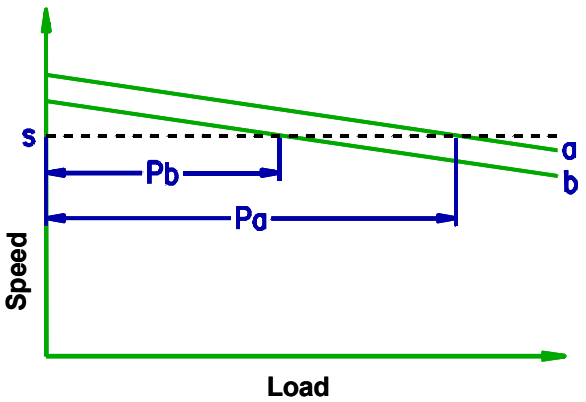

Fig 5.11.4 – Speed characteristics.

REACTIVES DIVISION (VA):

The voltage applied to a load connected to two generators is determined by their total excitation.
Identical generators fitted with speed regulators of their primary machines with same characteristics divide loads on the same proportion and, if they have same excitation, divide VA same reactives. Each generator operates with same power factor. Any excitation increases in one of the generators will cause system voltage increase and this generator will supply more VA reactives.
Any excitation decrease in the other generator will make the terminal voltage return to original value. However, the difference in the division of VA reactives will be affected.
Then generator excitation adjustments will determine the voltage applied to the load and the division of reactives between generators.

5.12. GROUND COIL CALCULATION OF THE GENERATOR STAR POINT

When single phase loads are connected to three phase generators, mainly if these connections are unbalanced, we will have high third harmonic influence. As a consequence, zero current will go through the circuit. To eliminate or reduce this effect, use a current limiting reactance on the neutral grounded to the generator.
This reactance can be calculated as follows:

$$Xdr = \frac{Un}{\sqrt{3}\ In} . 0,3$$

Where:

Un = generator rated voltage
In = generator phase rated current

We have also to consider:

a) The coil must have linear characteristics up to 0.3 x In
b) It must thermically withstands 0.4 x In

6 . CONSTRUCTIVE CHARACTERISTICS

6.1. MAIN COMPONENTS

The complete generator can be taken apart in several functional units which are shown ahead. The generatos composition depends on the type of machine (GTA or S line).

6.1.1. Main machine stator

Frame is calandered (GTA) or steel plated (S). The stator lamination core together with the corresponding winding is placed into the frame grooves.
Winding is usually built for class F or H and are fixed with the closing wedge consisting of an insulating material.
Coil heads are strenghtened to withstands knocks and vibrations (Fig. 6.1.1).

6.1.2. Main machine rotor

The rotor accommodates the field winding whose poles consist of lamination cores. Any squirel cage winding, for smoothing purposes, compensates parallel operations and with irregular loads.

6.1.3. Main exciter stator

The main exciter is a three phase salient pole current generator, and is fixed to the non-drive end bearing plate through several bolts (Fig 6.1.1). The salient pole accommodate the field coils, which are series-connected, with the tags taken to the connection block in the terminal block.

6.1.4. Main exciter rotor and rotating rectifiers

The main exciter rotor is mounted on the main machine shaft. The rotor is laminated and its slots accommodate a three phase star-connected winding.
The common point of this connection is not accessible. From each star-connection point leave two leads for the rotating rectifiers. Out of these two leads, one is connected to the rectifier on the positive support, and the second is connected to the same rectifier on the negative support.

6.1.5. Auxiliary exciter

Only for SP line – The auxiliary exciter is an external pole machine. Its rotor consists of magnets which are its own excitation poles. Built with laminations, the stator is fitted with a three phase winding and is placed on the drive end side.

6.1.6. Auxiliary winding (auxiliary coil)

This is a single phase auxiliary winding which is fitted into some of the main stator slots.
Its main function is to power the main exciter field, regulated and rectified by the voltage regulator.

6.2. IDENTIFICATION NAMEPLATE

When the manufacturer designs a generator and makes it available for sale, certain items must be met as follows:
- driven load charactreristics;
- conditions under which the generator will operate.

All these values together make the generator "rated characteristics". The way the manufacturer informs such data to the customer is through the generator identification nameplate (Fig. 6.2.1).

6.3. STANDARDS

It is basically impossible to include in the nameplate all extended information, thus abbreviations are required. Besides that, all written values must be objective, avoiding misinterpretation and variation limitations.
To ensure that, a technically skilled manufacturer will check the Standards to get correct abbreviations and symbols and how to represent them. WEG generators are manufactured according to ABNT (Brazilian Association of Technical Standards) Standards and IEC (International Eletrotechnical Commission) International Standards.

6.4. PAINTING – GENERAL PURPOSE GENERATORS

The painting of these generators consist of two coats:
- Primer: after cleaning, all parts are alkyd primer painted. Painting application is done by immersion. The dry film thickness is at least

30µm.

- Final coat: final coat, applied after complete machine assembly, consist of a alkyd synthetic enamel coat. Painting application is done with painting gun. The dry film thickness is at least 30µm.

6.5. GROUNDING LUG

The purpose of the grounding lug is to protect the electric machine operators from machines he is operating to avoid eventual short-circuit between an energized part and the machine frame. This protection is done by offering an easier way for the current flow, avoiding going through the machine operator. The grounding lug is usually placed on the generator right feet on the connection box side.

6.6. MOUNTING

WEG generators are built in the B15 mounting (single bearing), B5/B3, as you can see on the generator catalog.
D5 and D6 mountings are usually applied to large size generators for hydro and trube applications.
For GTA line, the standard mountings offered are:

- Single bearing with flexible disc coupling (B15T);
- Double bearing with coupling flange (B5/B3T).

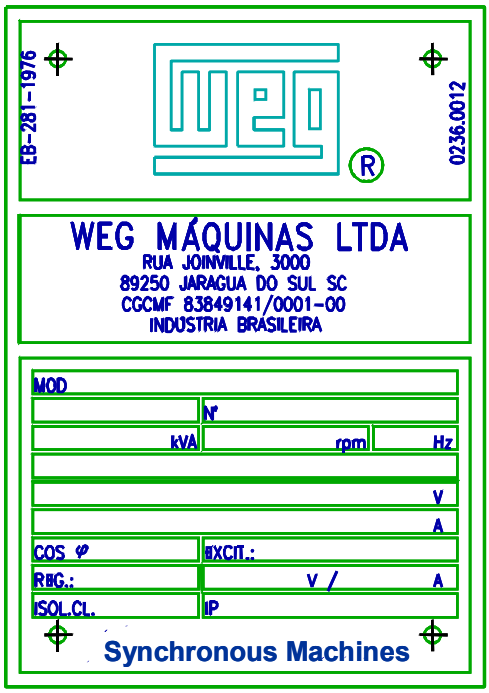

Fig. 6.2.1 – Identification nameplate.

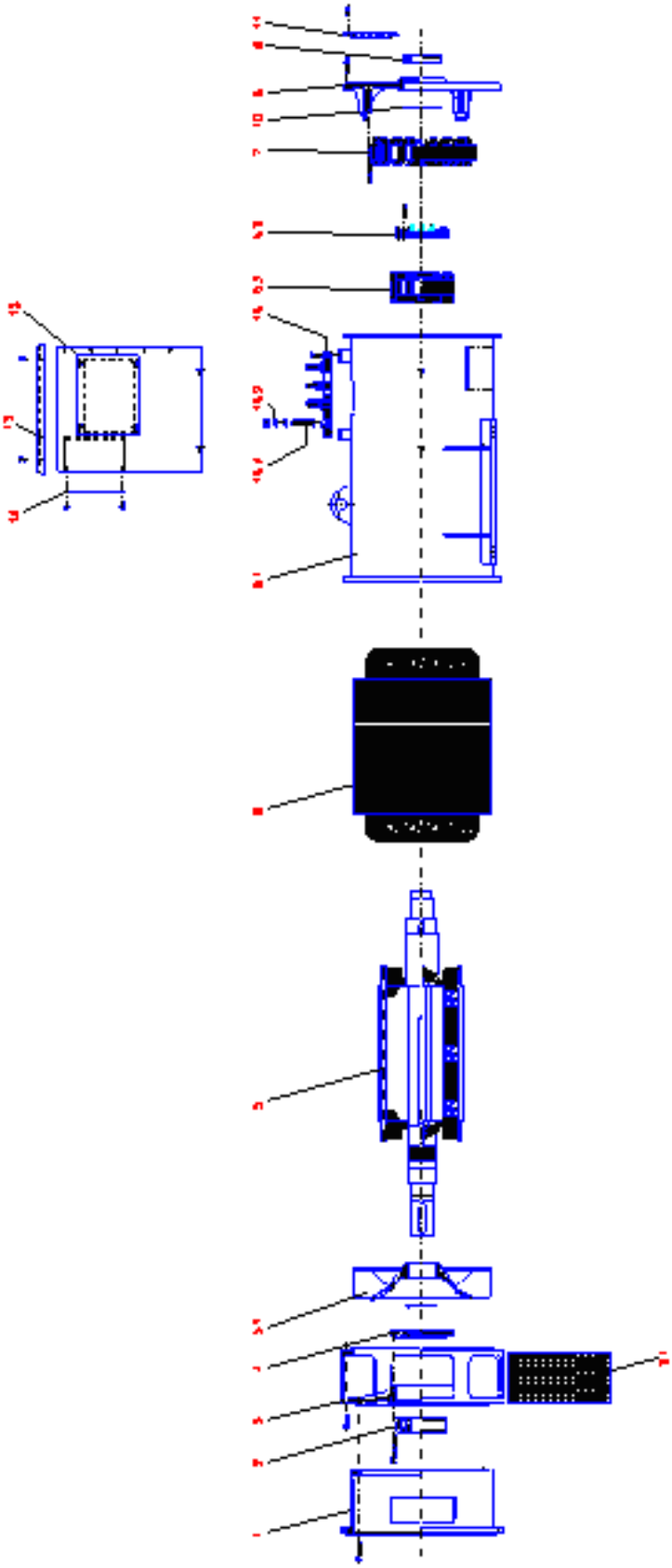

1 – Intermediate coupling flange – drive end side
2 – Bearing – drive end side
3 – Drive endshield – drive end side
3.1 – Drilled lamination (IP21)
4 – Internal bearing cap – drive end side
5 – Complete rotor assembly
5.1 – Fan
5.2 – Main exciter rotor
5.3 – Rotating rectifier set
6 – Complete stator assembly
6.1 – Frame
7 – Main exciter stator
8 – Non-drive endshield, non-drive end side
9 – Bearing – non-drive end side
10 – Bearing cap
11 – Rectifier inspection cover
12 – Connection box
13 – Connection box top cover
14 – Voltage regulator cover
15 – Terminal blocks
15.1 – Connection pin
15.2 – Terminal fastening nut

Fig.6.1.1 – GTA generator components.

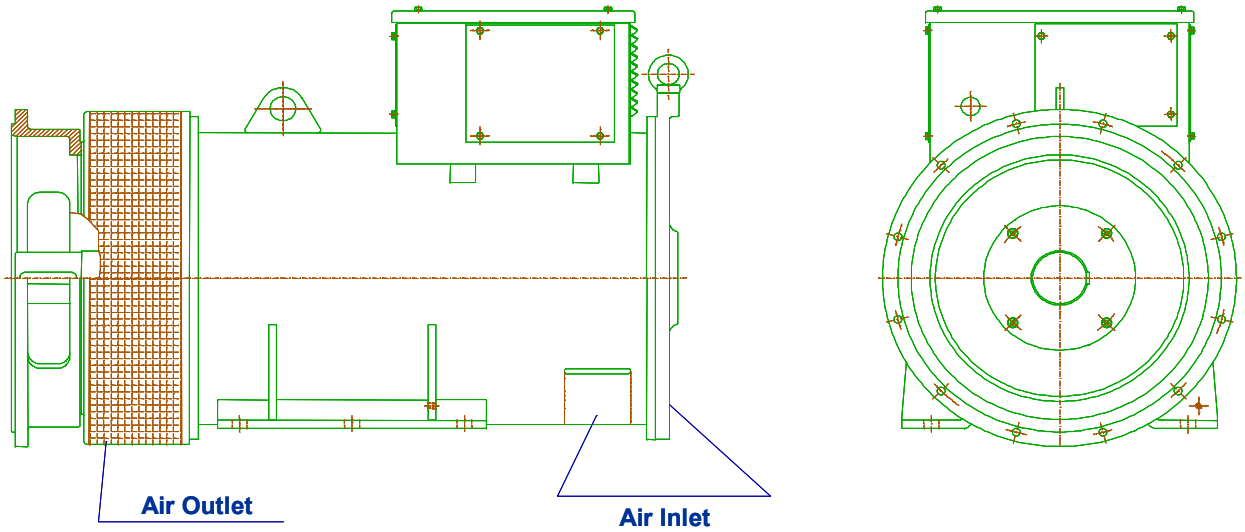

Fig. 6.6.1 - B15T mounting (GTA).

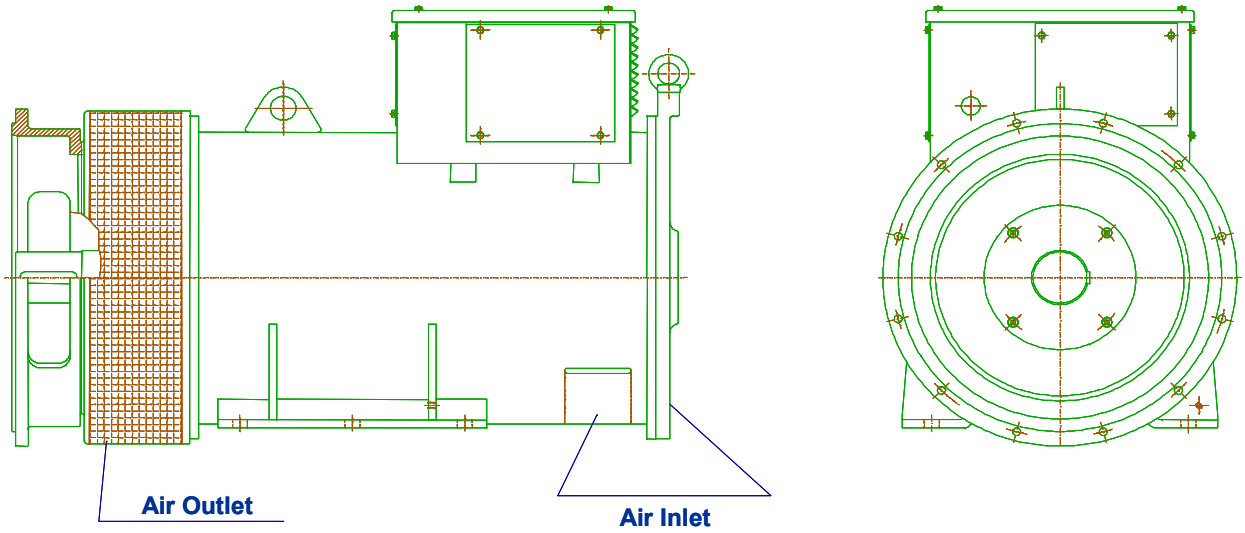

Fig. 6.6.2 - B5/B3T mounting (GTA).

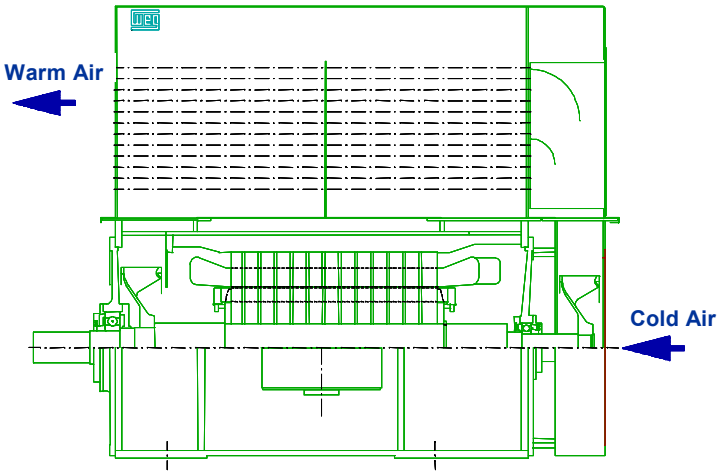

Fig. 6.6.3 - B3 mounting (S Line, enclosed with air-air heat exchanger).

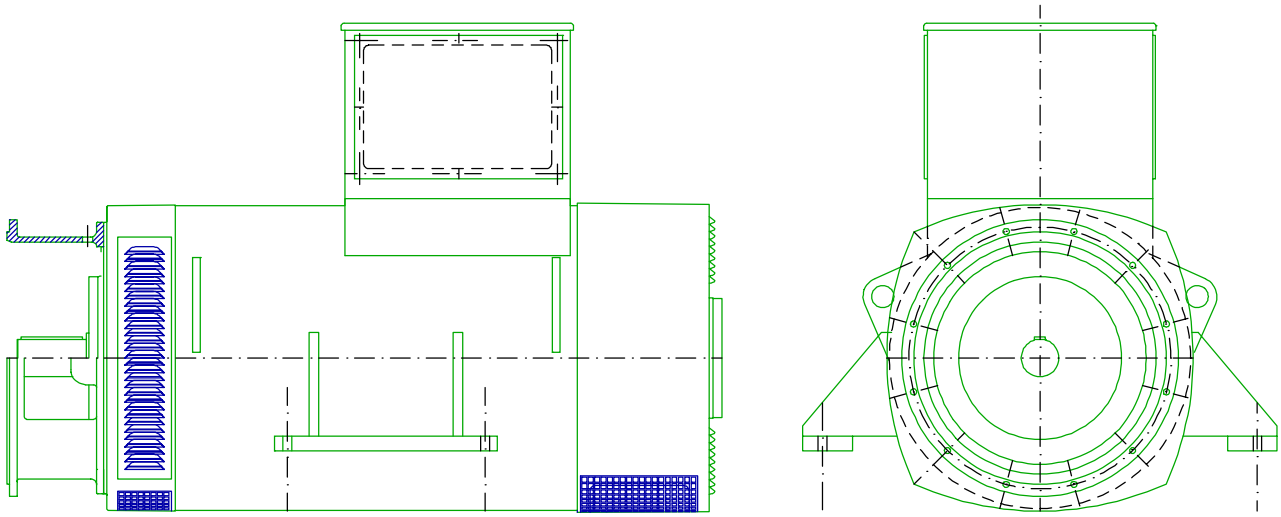

Fig. 6.6.4 - B5/B20 mounting (former DKB line).

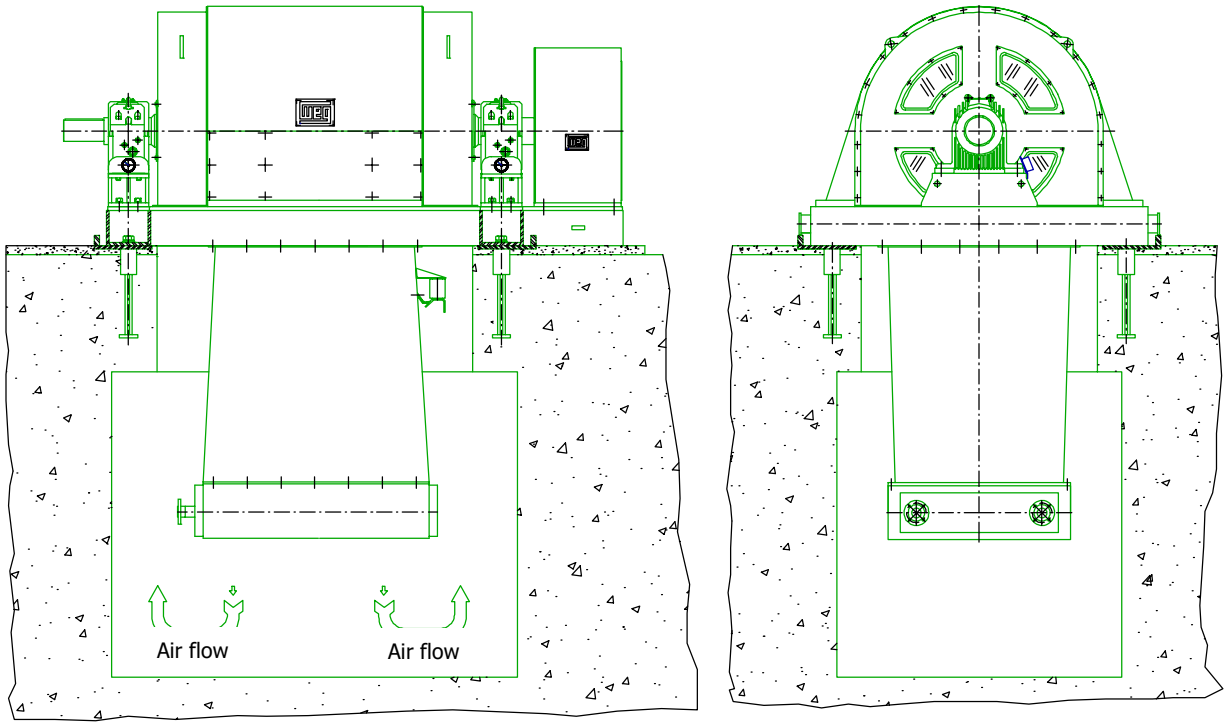

Fig. 6.6.5 - D5 mounting (S line, with air-water heat exchanger).

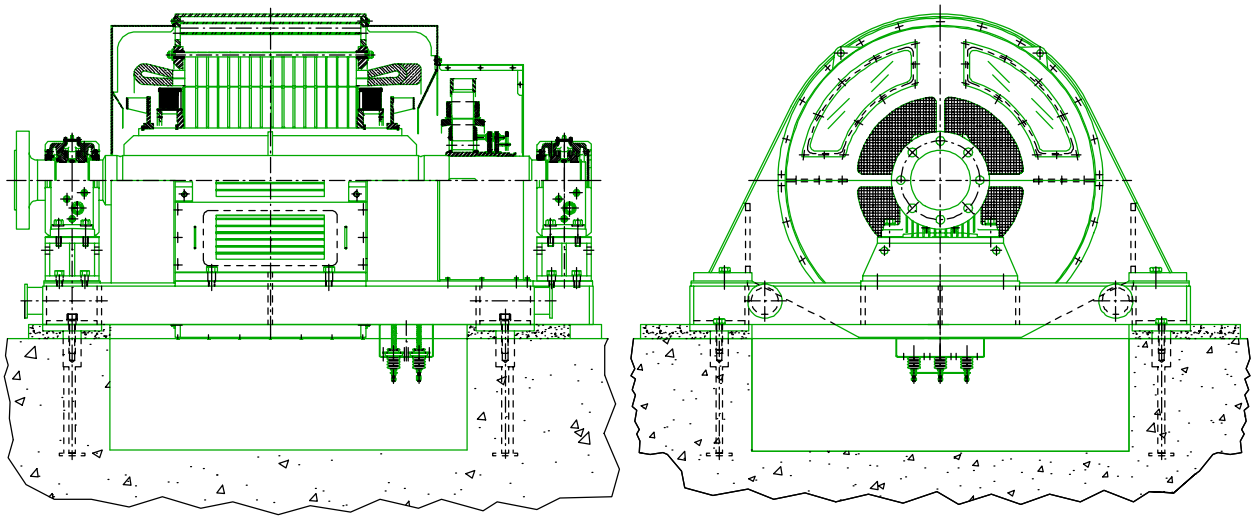

Fig. 6.6.6 - D6 mounting (S line, open machine).

6.7. USUAL OPERATING CONDITIONS

Among the standardized information that do not need to be stated in extense on the identification nameplate are the conditions under which the generator was designed to operate, that is, the usual operating conditions". If the generator is intended for special operating conditions, the purchase order must include that information. The usual operating conditions are:

a) Cooling means (on most cases it is the ambient air) not exceeding 40ºC and free of harmful materials to the generator.
b) Application under the shade.
c) Altitude not exceeding 1000 meters above sea level.

7 . GENERATOR SELECTION

7.1. REQUIRED CHARACTERISTICS FOR CORRECT SELECTION

For correct generator specification, the following information are required on the inquiry stage:

1) Rated power (kVA)
2) Cooling method (Open, air-air or air-water heat exchanger)
3) Speed (number of poles)
4) Power factor
5) Rated voltage
6) Number of phases (Three or single phase)
7) Operating frequency (Hz)
8) Excitation type: - brushless – system with brush and with static excitation
9) Degree of protection
10) Mounting
11) Ambient temperature
12) Altitude
13) Application type: Industrial, Telecommunications, Naval, Marine
14) Load characteristics. Ex: induction motor starting
15) Voltage adjustment range
16) Regulation precision
17) Accessories
18) Eventual overloads
19) Power supply voltage for inside heaters
20) Regulation type (U/f constant or U constant)
21) Coupling type
22) Drive machine

7.2. MAIN GENERATOR APPLICATIONS

Considering they are simple installation and maintenance machines, generators are largely used on small power supply centers, specially far away from towns where power supply networks are not there. For example, in farms, suburbs, TV telecommunication stations, etc...
It is applied as NO-BREAK (ininterrupt or emergency supply systems) in hospitals, computer centers, control systems, telecommunications, airports, etc. Another typical application is the application of generators groupped to motors for frequency or voltage transformation and reactive converters.

7.2.1. Frequency conversion

Possibilities:
- Coupling to a gearbox with motor and synchronous generator (gearing ratio);
- Belt coupling with asynchronous motor and synchronous generator (pulley ratio);
- Direct coupling (on the same shaft) with a 12 pole synchronous motor and a 10 pole synchronous generator or multiple of them (ratio of poles).

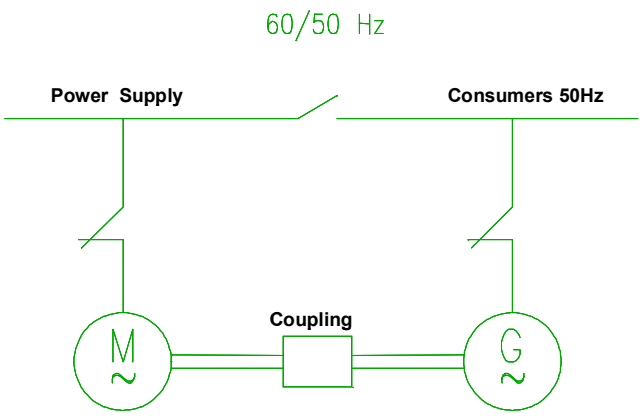

Fig. 7.2.1 – Coupling between asynchronous motor and generator 60/50 Hz.

Characteristics:
Advantages of frequency convertion on rotating machines over static conversion of solid states are:
- Improved voltage waveform;
- Reduced influence on the power supply voltage variations;
- Keeps generator voltage during a short lack of power supply with the application of a shaft fly wheel;
- Frequency identical to power supply frequency when using a synchronous motor;
- Reduced consumer influence on the power supply.

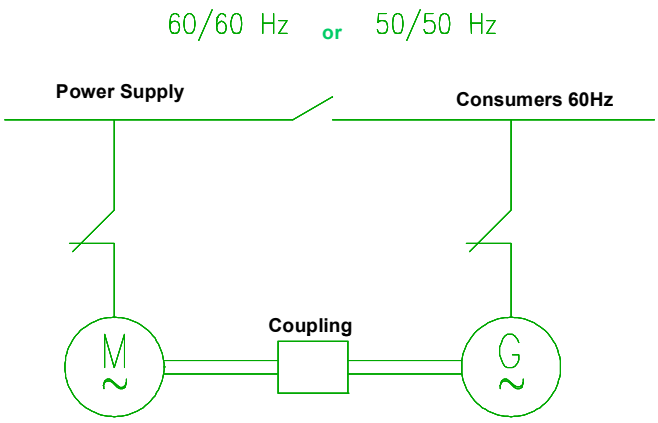

Fig. 7.2.2 – Coupling between AC motor and generator.

Applications:
- Military equipment;
- General harbor equipment;
- Testing laboratory;
- Imported equipment drive.

7.2.2. Current Conversion

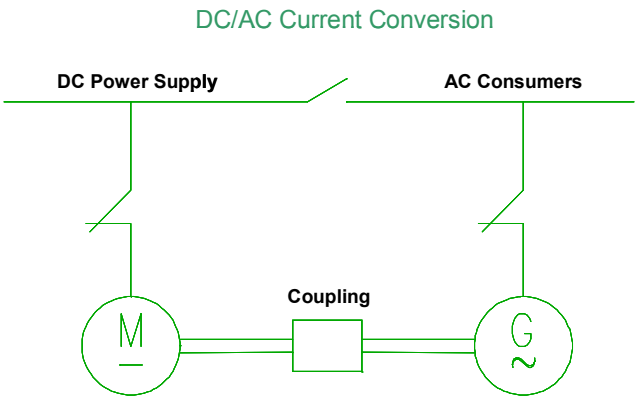

Fig 7.2.3 – DC/AC current converter.

Possibilities:
a) Direct coupling of a DC motor with synchronous generator;
b) Direct coupling of a DC motor with synchronous generator, plus an optional inertia fly wheel.

Characteristics:
- Generator frequency varies in reference to load as the DC motor presents speed variations. For constant speed, the regulating system is more complex;
- Generated voltage is maintained for short interruption of DC power supply (Ex: on commutations) when using a shaft fly wheel;
- Generated voltage with harmonic distortion below 3% can be obtained;
- It is ideal for application NO-BREAK's, once the motor can be powered by the Ac power supplied through a static converter, and, when under lack of power supply, power supply is provided through bank of batteries.

Applications:
- Ships with DC power supply;
- Laboratories;
- Clinics and hospitals;
- Large size sub-stations;
- Utilities;
- Refinaries;
- NO-BREAK systems, etc.

7.2.3. NO-BREAK

a) Battery: it works as ininterrupt power supply system consisting of a DC motor, synchronous generator, fly wheel, assembly common base and battery bank.

b) No-Break Diesel: as on the previous case, it works as an ininterrupted power supply system consisting basically of a asynchronous generator, fly wheel, electromagnetic coupling, diesel engine and common base (Fig. 7.2.5).

The main applications are:
- Radio and TV stations;
- Data processing center.

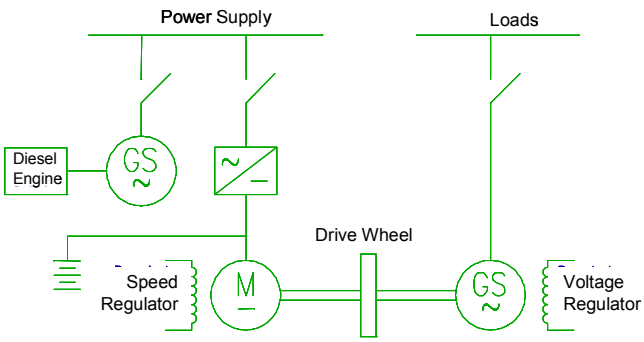

Fig. 7.2.4 – Continuous Supplying System.

An emmergency diesel set to ensure ilimited operating time may be asociated.

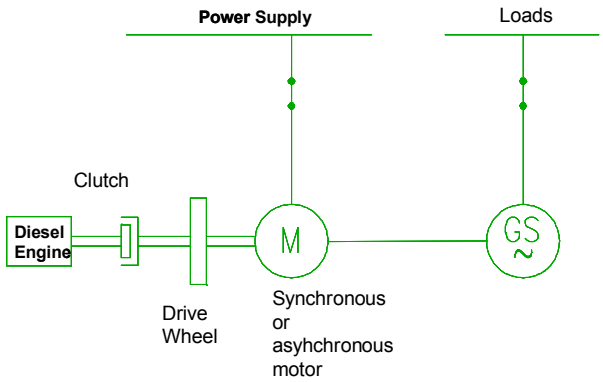

Fig. 7.2.5 – Ininterrupt power supply system with Diesel engine.

7.2.4. Short-Break Diesel

It works as a momentary ininterrupt power supply system (0.1 to 1s), when power supply is lacking. It consists basically of: induction motor, synchronous generator, fly wheel, electromagnetic coupling, diesel engine and common assembly base (Fig. 7.2.6).

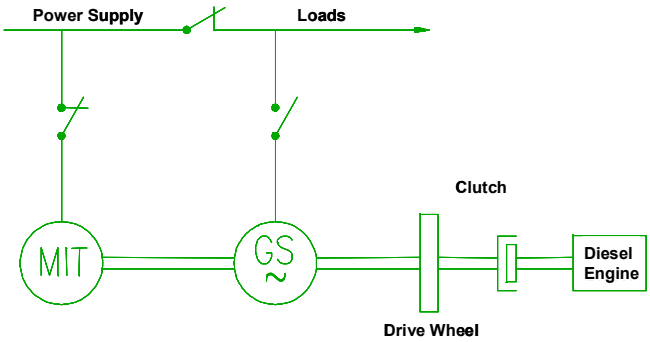

Fig 7.2.6 - Short-break diesel.

Assures power supply with ilimited time period, however with little speed interruption and drop during diesel engine starting, which is supported by a fly wheel.
The main applications are: street traffic control, railroads, surgery rooms, etc.

7.2.5. DPC Generators

Technological progress in electronics have resulted in large data processing centers, sophisticated eletronic devices for automation, air traffic control, safety bank system, etc.
These technological improvements led us to other problems, and one of the most critical is that related to power supply quality.
By their nature, commercial power supply systems are subject to a high number of variations.
These variations may occur either on power generation and transmission or on power supply distribution.

Here are a few examples:
- Voltage variations due to starts of other equipment;
- Excessive overvoltage due to atmospheric discharges, commutations (switching) and system failures;
- Short interruption intervals due to power supply commutations, failures or temporary short-circuits.

Power supply effect on computers:
The main damages to the computer or other electronic equipment caused by power supply fluctuations are:
- On-line connection losses;
- Outlet data errors;
- Information losses;
- Automatic switching-off;
- Equipment damage;
- Long time period for reprocessing (recovery).

The waveform quality level is relevant to avoid the above mentioned damages to the electronic equipment and offers stable productivity.

These damages are syntoms of common problems on DPC's: poor quality on power supply.
This applications require brushless generators to avoid excessive noise caused by bad brush contact.
The power system through motor- generator is the most recommended technical-commercial solution to stablizing and filter computer power supply.

Motor-generator set:
The motor-generator set consists of electric rotating machines and serves as power supply filter. Diesel, natural or gasoline generator sets should not be confused. Typically, a motor-generator set consists of an electric motor that drives an electric generator, as per Fig.7.2.7.

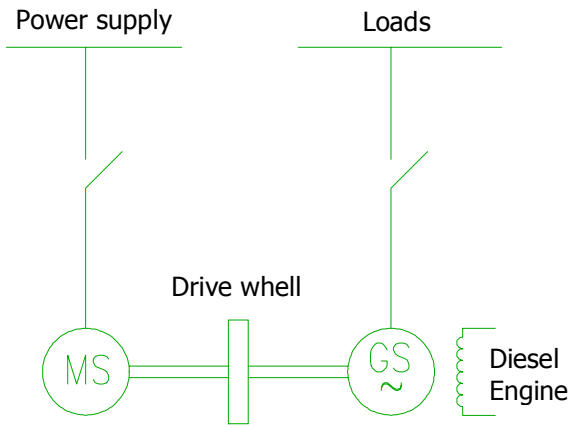

Fig. 7.2.7 – Motor-generator coupling.

The synchronous motor receives energy from the power supply and drives the synchronous generator which remains separated and electrically isolated from the power supply. Even with cents of volt severe sub or overvoltage transients on the power supply and also discontinuities (faults) up to 120 ms, the motor-generator set will power the electronic equipment with pure and stable voltage.

7.2.6. Industrial line generators

Industrial line generators are considered standard generators and have the following basic characteristics for GTA type:
- Rated voltage 220/380/440, 220/440 or 380 V;
- Stationary voltage performance between no load and full load for power factor ranging from 0.8 and 1.0 of 0.5%;
- Allowable voltage drop of 5%;

- Reference value adjustment of ± 5%;
- Dynamic voltage performance: average regulating time of 200 to 700 ms at rated load connection, with a voltage drop of 12 to 20%, depending on the machine;
- Harmonic distortion phase to phase below 5%;
- Maximum asymetric load of 30%;
- Momentary overloads of 2.0 x IN for 20 s;
- Permanent short-circuit current of 3 x IN;
- Applicable Standards: VDE, ABNT and IEC.

7.2.7. Telecommunication generators (TELEBRÁS Standard)

Synchronous TELECOMMUNICATION generators are manufactured as per Standard specifications. The most common applications are:
Emmergency Diesel sets for telephone centers, TV transmittion systems, radars, radio systems. airports and other typical loads.

Advantages:
- Brushes are not required, hence reducing maintenance. Only bearings required special care;
- Radio interference caused by bad brush contact is not introduced;
- Waveforem deformation generated, caused by loads, do not interfere on the regulation once the generator is powered by an auxuliary exciter, independently from the outlet voltage;
- Allow easy manual voltage control.

Technical characteristics
- Applicable Standards: VDE, ABNT, IEC and TELEBRÁS;
- Mounting: B5/B3T;
- Direct shaft sub-transitory reactance (X_d'') below 12%;
- Total harmonic distortion below 3% for linear load;
- Voltage regulation precision of ± 0.5% for any load value with power factor ranging between 0.8 and 1.0;
- Voltage transitory for 100% of the load equal to ± 10% of the rated voltage;
- Response time to recover the voltage below 0.5 seconds;
- Variations of ± 5% on engine speed will not damage the voltage regulation;
- Rated voltage adjustment range by potentiometers: normal adjustment of ± 15%, fine adjustment of ± 5%;
- Allowable overload: 10% for 1 hour every 6 hours, 200% for 15 seconds every hour.

7.2.8. Deforming power supplied generators

On applications that require generators, linear loads should not be disregarded.
The so-called deforming loads are considered non linear performance loads as far as current and/or voltage is concerned and, depending on the type, they present high harmonic content. The wave form of such loads is not senoid, causing a current that corresponds to the rated current required by the equipment. This type of load is currently found on several industrial, commercial and residential applications and so it must be determined for a corresponding generator application.

Some examples of deforming loads:
- Electronic equipment (no-break's, computers, sources, battery chargers, drives, electronic reactors);
- Machines with iron core coils which usually operate under saturation (motors, transformers, welding machines, reactors);
- Arc furnaces.

These types of loads are powered by generators may cause a few troubles to machinery as well as on their systems, as follows:
- Excessive heating on the stator winding and smoothing bars due to increase of copper losses;
- Overheating of stator and rotor lamination due to increase of iron losses;
- Excessive neutral currents caused by unbalance;
- Overdesign of leads, boards, protections, etc.

Due to above mentioned notes, before the application, carry out a study on the driven loads along with identifying harmonic content of the generator system.
Based on the result of such study and its interpretation, some measures may be taken on the generators to be applied, including:
- Application of a larger machine, with larger output power, leading to lower reactance and, as a consequence, lower voltage drop and reduced overheating;
- Application of a machine with 2/3 winding pitch, with loads presenting high 3ª harmonic content.

8. TESTS

Tests are groupped in ROUTINE TESTS, TYPE TESTS and SPECIAL TESTS, performed in accordance with VDE 530 and NBR 5052 Standards.

Other tests not listed hare may be performed, on request.

ROUTINE TESTS

- Winding ohm resistance
- Insulation resistance.
- Dielectric applied voltage
- Phase sequence and balance
- No load saturation
- No load test with self excitation (Voltage regulator)
- Permanent three phase short-circuit

TYPE TESTS

- Routine test.
- Temperature rise.
- Overspeed
- Direct Shaft Sub-transitory reactance

SPECIAL TESTS

- Permanent three phase short-circuit ratio
- Short-circuit current maintenance
- Voltage regulator performance
- Harmonic distortion
- Efficiency
- Vibration
- Noise level
- Determination of Telephone Interference factor (for Teleco communication)
- Determination of synchronous machine "V" characteristics.

NOTE: Tests are limited to an output of 500 kVA. For larger outputs, results will be extrapolated.

9. LIST OF FORMULAS

Induced electro-magnetic force

$$e = B \,.\, l \,.\, v \,.\, sen\,(B \wedge v)$$ [V]

Synchronous speed

$$n = \frac{120 \,.\, f}{p}$$ [rpm]

Delta connection

$$I1 = If \,.\, \sqrt{3}$$ [A]

$$Vf = UL$$ [V]

Star connection

$$I1 = If$$ [A]

$$U1 = Uf \,.\, \sqrt{3}$$ [V]

Ourput power

$$S = U1 \,.\, I1 \,.\, \sqrt{3}$$ [VA]

Electromagnetic output power

$$P = \frac{m \,.\, E_0 \,.\, Uf}{xd} sen\delta + \frac{m \,.\, Uf^2}{2}\left(\frac{1}{xq}\right) sen2\delta$$ [W]

Drive power

$$Pn = \frac{Pg(kW) \,.\, 100}{\eta\,(g)}$$ [kW]

Voltage Drop

$$\Delta U\% = \frac{X^* d \;.(Ip/In)}{1 + [\,X^* d \;.(Ip/In)]} \,.\, 100$$ [pu]

Reactance conversion

$$X2 = X1 . (f2/f1) . Sn2/Sn1 . (Un1/Un2)^2$$ [pu]

Short-circuit Current

$$Icceff = \frac{If}{x''d} x\ 100$$ [A]

$$Icc\ M`X = \frac{2,55\ x\ If}{x''d} x\ 100 \qquad x''d\ in\ \%$$ [A]

SYNCHRONOUS MACHINE MANUAL EVALUATION

Instructions how to fill out the questionnary:

a) Reply with an "x" in the correct alternative.
Example:
a. ( )
b. ( )
c. (X)
d. ( )
e. ( )

b) Only ONE alternative is correct.

c) If you have marked an incorrect alternative, void it and then mark new one as follows.
Example:
a. ( )
b. ~~(X)~~
c. ( )
d. (X)
e. ( )

1. BASIC CONCEPTS

1) As per Faraday induction law, we can affirm:
a. ( ) Induced electro-magnetic force is based on the fact that there is relative movement between a slot and a magnetic field.
b. ( ) The equation: e = B.l.v is valid for a turn.
c. ( ) The electro-magnetic force may be induced even without relative movement between turn and field.
d. ( ) If we have "N" turn, the induced electro-magnetic force will be: e = N.B.l.v
e. ( ) The law mentioned in item d is valid only for one turn.

2) If we have a 4 pole generator with, its primary machine drives it at 30 Rps, we can say that the frequency will be:
a. ( ) 59.8 Hz.
b. ( ) 60 Hz.
c. ( ) 120 Hz.
d. ( ) 50 Hz.
e. ( ) 30 Hz.

3) On series-parallel connection, when we supply a generator to operate at 3 voltages (220/380/440), to get 380V, it is correct to affirm that:
a. ( ) The connection is the same as 220V and we increase the machine excitation.
b. ( ) The connection is the same as 440V and we reduce the machine excitation.
c. ( ) The generator rated current is the same as on 440V.
d. ( ) The reactance will remain unchanged for different voltages.
e. ( ) All generators allow these connections.

4) We can classify two basic types of generators referred to excitation type:
a. ( ) With brushes and brushless.
b. ( ) Single phase and polyphase.
c. ( ) With 4 and 2 poles.
d. ( ) Rotating armature and rotating field.
e. ( ) All alternatives are correct.

5) As far as generator no load performace is concerned, we can affirm:
a. ( ) A little current will go through the armature.
b. ( ) The machine armature voltage will depend only on the excitation current.
c. ( ) The machine saturation can be noticed through the ratio between voltage generated and armature current.
d. ( ) The sum of losses will not differ from the load condition.
e. ( ) On this condition, the armature reaction causes distortions to main flow.

6) As far as generator performance with load is concerned, we can affirm:
a. ( ) The field crated by armature current circulation will always cause a demagnatizing effect to the machine.
b. ( ) Armature reaction will be same as on item "a", independently of cosφ.
c. ( ) Due to the fact that current goes through with purely resistive load, a field that tends to distorse the main field is then created.
d. ( ) In item "c" the induce magnetic field creates phase poles related to main poles.
e. ( ) For capacitive loads, the armature reaction flow is de-magnetizing.

7) When a purely inductive load is applied to the generator, we can affirm:
a. ( ) The load current will be displaced at 90º in advance referred to terminal voltage.
b. ( ) Due to the fact that this type of load has demagnetizing characteriastics, we need to have a corresponding excitation current increase.
c. ( ) The main effect caused for this type of load is to quickly brake the generator.
d. ( ) The armature reaction produces phase poles with the excitation.
e. ( ) The excitation current will be smaller that for a load with same intensity and purely resistive load.

8) When analysing performance of transitory synchronous machines, a calculation system is applied through which we get to acceptable results. This system is:
a. ( ) Analytic reactance study.
b. ( ) Decomposition of phase currents into symetric and balanced currents (direct, quadrature and zero shaft).
c. ( ) Machine dynamic performance study.
d. ( ) Decomposition of phase voltages into symetric and balanced voltages (direct, quadrature and zero shaft).
e. ( ) All items listed above are incorrect.

9) Machine reactance, whose value may be obtained dividing the armature voltage value before the fault, by the current at the beginning of the fault is called:
a. ( ) Direct shaft reactance.
b. ( ) Quadrature shaft reactance.
c. ( ) Synchronous reactance.
d. ( ) Sub-transitory reactance.
e. ( ) Transitory reactance.

2 – WEG GENERATORS

10) On fixed armature and brush-excitation generators, we can affirm:
a. ( ) The brushing starts by an AC external source.
b. ( ) The outlet voltage is maintained constant which is controller by a voltage regulator.
c. ( ) In reference to item "b", the static exciter meets the terminal voltage constant for any load and power factor.
d. ( ) The brushing starts through the regulator.
e. ( ) It is widely applied to data processing centers.

11) Mark what is correct about smooth winding.
a. ( ) It consists of inter-connected copper bars forming a cage.
b. ( ) It is intended to smooth the variations caused by the primary machine or by the load.
c. ( ) Its circuit is maintained open during the starting.
d. ( ) It helps the field winding when generating flow.
e. ( ) It is responsible for machine short-circuit.

12) Mark the INCORRECT alternative.
a. ( ) The smooth windings also reduce harmonic intensity.
b. ( ) Synchronous motors start as they are squirrel cage asynchronous motors.
c. ( ) Synchronous motors have high starting torque.
d. ( ) The squirrel cage operation, when under asynchronism, is based on Lenz law.
e. ( ) On synchronous motors, the field winding is short-circuited on the starting with the purpose of avoiding excessive voltage induction on the terminals.

13) Referring to Brushless generator characteristics, we can affirm:
a. ( ) The excitation is obtained from a fixed pole generator (main exciter) and from a rotating rectifying bridge.
b. ( ) The brushing starts through an AC source.
c. ( ) Voltage inductions occur even with inert rotor.
d. ( ) The rotating rectifiers rectify the three phase voltage coming from the main exciter, which power the main machine field.
e. ( ) All above alternatives are incorrect.

14) Mark the correct alternative.
a. ( ) The Brushless generator consists of 2 parts: main machine and auxiliary exciter.
b. ( ) The voltage regulator is powered by the main exciter terminals.
c. ( ) The load current is maintained with the application of an auxiliary exciter independetly of the load.
d. ( ) From the generator terminals, the reference for main exciter is taken.
e. ( ) A negative point of the auxiliary exciter is its high power, which leads to overdesign.

15) Mark advanges of the Brushless system over brush system.
a. ( ) Introduces radio interference due to poor brush contact.
b. ( ) Higher maintenance.
c. ( ) Lower cost.
d. ( ) Shorter response time.
e. ( ) There is no interference due to tiristor switching.

16) Mark the correct alternative:
a. ( ) The regulator compares a reference voltage with a real voltage taken at the machine terminals and turn them into appropriate values.
b. ( ) The regulator can operate with characteristics of U = cte.
c. ( ) If there is no terminal reference voltage and current for the regulator, the terminal voltage will come down to zero.
d. ( ) The power transistor is powered by the main exciter.
e. ( ) None of the above alternatives are correct.

17) Complete the blank spaces:
" A Brushless generator, operating at constant speed and power factor between 0.8 and 1.0, results in a stationary voltage precision of ____ between no load and with load. Speed voltages up to ____ will not cause any effect over the generator voltage magnitude, and we can adjust generator voltage at _____ of therated voltage.
a. ( ) ±1%, 12%, ±5%.
b. ( ) ±0,5%, 10%, ±2%.
c. ( ) 0,5%, 5%, 8%.
d. ( ) 0,5%, 5%, 5%.
e. ( ) 0,1%, 2%, 5%.

3 – AMBIENT CHARACTERISTICS

18) Mark the INCORRECT alternative:
a. ( ) Above 1000m of altitude generators may have overheating if they are not designed for such condition.
b. ( ) Generator heating varies with the power square.
c. ( ) Above 1000m of altitude, air is more rarefacted, reducing the generator cooling capacity.
d. ( ) Above 1000m of altitude,the generator has an improved heat exchange with the cooling means.
e. ( ) At 1000masl and 40ºC of ambient temperature, the generator is suitable to supply its rated power.

19) If the generator operates at 2000m of altitude and 55ºC of ambient temperature, its useful power will be (insulation class H):
a. ( ) 70%.
b. ( ) 92.5%.
c. ( ) 80%.
d. ( ) 90%.
e. ( ) 50%.

20) Match the columns (left with right):

(1) IP 54.	( ) Drops at 15º vertically.
(2) IP 55.	( ) Rain at 60º vertically.
(3) IP 44.	( ) Splashes from all directions.
(4) IP 22.	( ) Drops vertically.
(5) IP 21.	( ) Water jets from all directions.
(6) IP 23.	( ) Protection against dust accummulation.

21) Match the columns (left with right):

(1) IP 54.	( ) Foreign materials above 1mm.
(2) IP 21.	( ) Foreign materials above 50mm.
(3) IP 44.	( ) Dust accummulation.
(4) IP 12.	( ) Foreign materials above 12mm.

22) In reference to protections, mark the correct alternatives:
a. ( ) Any protection replaces higher degrees of protection with great advantages.
b. ( ) The degrees of protection IP 21, IP 22, IP 23 apply to enclosed machines
c. ( ) IP 44 machines are totally enclosed with external ventilation.
d. ( ) IP 44 machines are fited with radial ventilation.
e. ( ) IP 54 machines are fitted with labyrinth tachonite.

23) Cooling system is a "heat exchange system between generator heated parts and ambient air". Based on this statement, match column at left with right.

(1) Totally enclosed generator without ventilation.	( ) IP 54.
(2) Open generator.	( ) IP 23.
(3) Totally enclosed generator with ventilation.	( ) Rarely applied (strict application)
(4) Totally enclosed generator.	( ) Fan is fitted out of the generator frame.

24) Space heaters are used on generators installed on:
a. ( ) Very dry ambient.
b. ( ) Very moistured ambient.
c. ( ) Very cold ambient.
d. ( ) CPD generator.
e. ( ) Corrosive environments.

4 – PERFORMANCE CHARACTERISTICS

25) When we refer to generator rated output power, it is correct to affirm:
a. ( ) It is the required power to drive it.
b. ( ) It is the power that the generator supplies at continuous service duty and under rated characteristics.
c. ( ) It is the "stand-by" power.
d. ( ) It is higher than the generator drive power given in KW.
e. ( ) It is the output power developed by the primary machine.

26) It is not CORRECT to affirm:
a. ( ) When we apply an overload to a generator, we may exceed its stability limit.
b. ( ) Generator may burn out at the overload condition.
c. ( ) Even under slight overload conditions, life time will be reduced.
d. ( ) The stator winding temperature increases at a cube proportion as the current increases.
e. ( ) The generator may be designed to operate under overload conditions.

27) For a generator that will be connected to loads with different power factors it is correct to affirm:
a. ( ) It is only required to know the power factor of the higher load.
b. ( ) We should get the average of all involved power factors.
c. ( ) We must know the active and reactive power components, calculate the general apparent power and then the general power factor.
d. ( ) We can adopt on the worst case power factor of 1.0.
e. ( ) We can disregard inductive loads.

28) Mark the correct alternative:
a. ( ) On a generator, the ratio between its output power and the driving power defines the losses.
b. ( ) Every primary machine has efficiency equal to 100%.
c. ( ) On a generator, the ratio between its output power and the driving power defines the efficiency.
d. ( ) There is no ratio between generator output power and driving power.
e. ( ) The generator does not require primary machine to generate energy.

29) Match the columns (left with right).

(1) Class A.	( ) 155ºC.
(2) Class E.	( ) 180ºC.
(3) Class B.	( ) 120ºC.
(4) Class F.	( ) 130ºC.
(5) Class H.	( ) 105ºC.

30) In reference to insulation class, we can affirm:
a. ( ) Classes F and H are usually applied to generators.
b. ( ) Insulation classes determine the minimum temperature withstood by the machine without affecting its life time.
c. ( ) 8 to 10ºC of insulation temperature rise does not affect the machine life time.
d. ( ) The type of insulation material is only applied to high moisture environments.
e. ( ) All above alternative are correct.

31) On insulation class F generators. For an ambient temperature of 40ºC, the allowable winding temperature rise and its hottest spot temperature are rescpectively:
a. ( ) 80ºC and 130ºC.
b. ( ) 100ºC and 130ºC.
c. ( ) 125ºC and 180ºC.
d. ( ) 100ºC and 155ºC.
e. ( ) 80ºC and 155ºC.

32) The generator armature winding (copper wire) after the test presented a resistance of 0.18Ω. What was this winding temperature rise if the cold generator measured at 22ºC was 0.14Ω, considering that the ambient temperature did not change during the test?
a. ( ) 72.9ºC.
b. ( ) 57.1ºC.
c. ( ) 71.4ºC.
d. ( ) 73.4ºC.
e. ( ) 83.5ºC.

33) In reference to generator voltage drop, we can say that ONLY one of the alternatives do not affect the final result.
a. ( ) Type of load that is connected to the generator.
b. ( ) Depends on the cos φ of the load.
c. ( ) Depends on the generator reactance.
d. ( ) Depends on the voltage regulation type.
e. ( ) Depends on the load subtransitory reactance.

34) It is correct to affirm:
a. ( ) Induction motor starts almost do not affect the generator, as these present low reactances.
b. ( ) Induction motors present high starting cos φ.
c. ( ) Generator reactance is constant and independs on the voltage that is applied to.
d. ( ) Motor power factor on the starting is about 0.3.
e. ( ) If the generator is fitted with a regulator, its voltage will always remain fixed, idependently from the type of load.

35) Considering the power factor influence on the voltage drop calculation, we can affirm:
a. ( ) The voltage drop will be the same for any power factor.
b. ( ) When starting induction motors, the power factor will be low and its influence on the voltage drop will be quite low.
c. ( ) The lower the power factor is the higher is the voltage drop.
d. ( ) When calculating the voltage drop, we must know the power factor of the higher load.
e. ( ) The power factor does not affect voltage drop.

36) Supposing we have a generator, and when starting a synchronous motor, voltage drop was calculated considering PF = 0, resulted ΔU = 20%. Then it was noticed that the PF on the starting was 0.4. What will be the real voltage drop? (consider Xd'= 20%).
a. ( ) 15%.
b. ( ) 10%.
c. ( ) 19%.
d. ( ) 22%.
e. ( ) 27%.

37) They are types of initial loads on generators.
a. ( ) PF constant, constant resistance and constant impedance.
b. ( ) kVA constant, constant current and constant impedance.
c. ( ) PF constant, constant current and constant impedance.
d. ( ) kVA constant, constant resistance and constant impedance.
e. ( ) PF constant, constant allowance and constant impedance.

38) It is correct to affirm:
a. ( ) Constant impedance loads make the voltage drop effect worse.
b. ( ) Heaters and lights are considered constant current loads.
c. ( ) For constant KVA loads, with voltage reduction, we will have current increase.
d. ( ) When combining constant KVA and constant current loads, we will have constant voltage loads.
e. ( ) No load induction motors are examples of constant KVA loads.

39) When we start a generator-power motor, we must consider:
a. ( ) Motor subtransitory reactance.
b. ( ) Motor starting current.
c. ( ) Reactive generation effect.
d. ( ) Cable resistance that connects generator to the load.
e. ( ) None of the above alternatives are correct.

40) In reference to generator parallel operation, we can affirm:
a. ( ) Usually when we have small output power motors, we use parallel-operation generators.
b. ( ) If we have two generators connected in parallel, the equivalent reactance will be twice the reactance of one of the generators.
c. ( ) One generator does not influence the power distribution of the other.
d. ( ) For voltage drop calculation on this case, we must calculate the equivalent reactance of the generators.
e. ( ) All above alternatives are correct.

41) When operating generators in parallel, we must supply to the generator a voltage and current reference, which is done:
a. ( ) Directly.
b. ( ) Using CT (with ratio In:1) and PT.
c. ( ) Through resistors.
d. ( ) With the application of capacitors.
e. ( ) Only with CT.

5 - MOUNTING CHARACTERISTICS

42) Mark the correct alternative in reference to GTA generators:
a. ( ) The main machine frame is built with calandered steel plates.
b. ( ) The main machine rotor fits the field winding.
c. ( ) The auxiliary exciter is an inside pole machine.
d. ( ) The auxiliary winding is single phase and powers the main exciter field.
e. ( ) Alternatives "a" and "d" are correct.

43) In reference to mounting configuration, we can affirm:
a. ( ) B15 means a double bearing generator.
b. ( ) B5/B3 means double bearing and pulley belt coupling.
c. ( ) Mountings D5 and D6 are applied to small size generators.
d. ( ) WEG generators with B3 mounting comply with NBR 5116 Standard.
e. ( ) All above alternatives are incorrect.

6 - GENERATOR SELECTION

44) WEG generators do not meet only one application which is:
a. ( ) Industrial application.
b. ( ) Naval application.
c. ( ) Explosion proof area application.
d. ( ) Telecommunication application.
e. ( ) DPC application.

45) It is a characteristic of DPC generators:
a. ( ) High harmonic distortion.
b. ( ) High interference.
c. ( ) Low transitory reactance.
d. ( ) Harmonic distortion ≤ 3% for linear loads and Xd" < 12%

e. ( ) All above alternative are correct.
46) It is a characteristic of a WEG industrial line generator:
a. ( ) Harmonic dostortion above 5%.
b. ( ) Permanent short-circuit current of 2.5 x IN.
c. ( ) Maximum asymetric load of 50%.
d. ( ) Temporary overloads 3 x IN for 20s.
e. ( ) Allowble speed drop of 5%.

47) It is a characteristic of WEG telecommunication generator:
a. ( ) Uses brushes.
b. ( ) Harmonic distortion higher than 3%.
c. ( ) Subtrabsitory reactance lower than 12%.
d. ( ) Fine voltage adjustment of 20%.
e. ( ) Response time to recover voltage above 500ms.

7- TESTS

48) In reference to type of tests, we can include:
a. ( ) Maintenance of short-circuit current.
b. ( ) Harmonic distorsion.
c. ( ) Noise level.
d. ( ) Direct shaft subtransitory reactance.
e. ( ) None of the above alternatives are correct